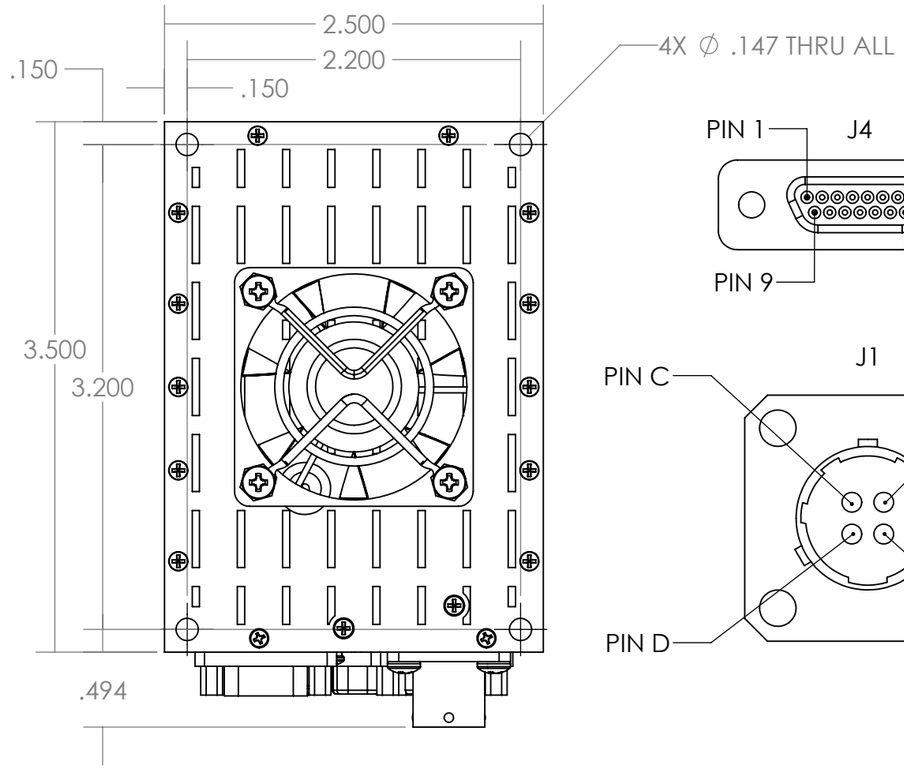

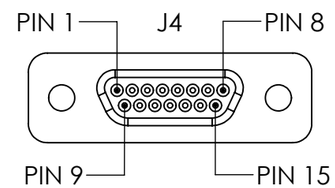

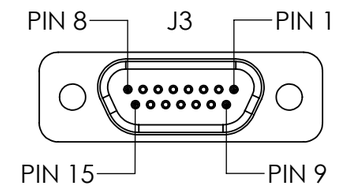

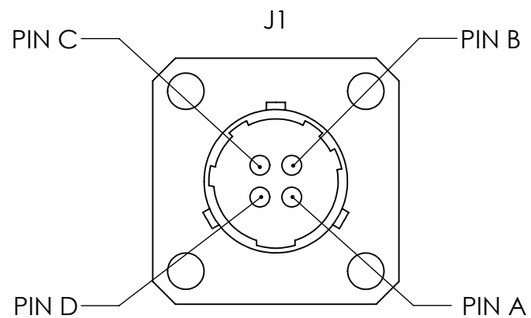

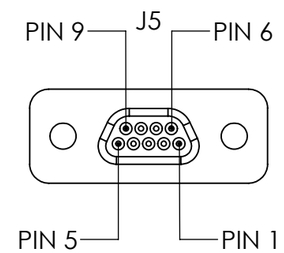

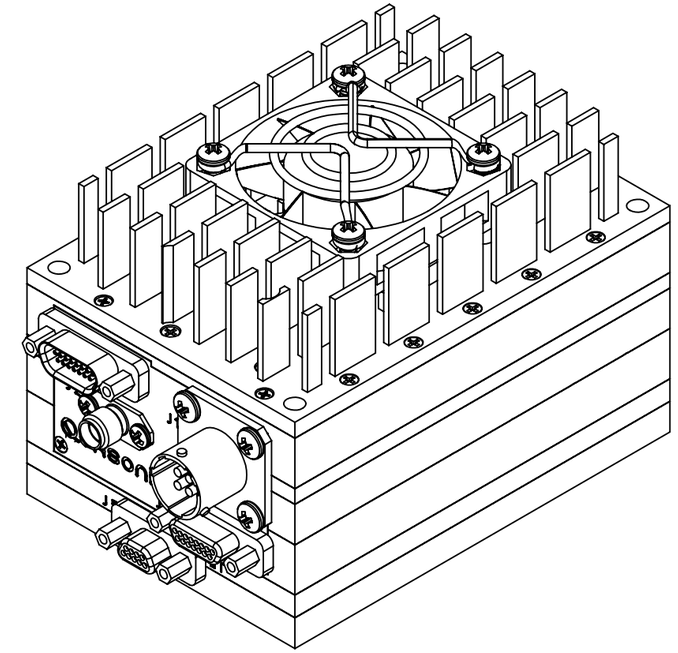

MOUNTING HARDWARE	TIGHTENING TORQUE	CLAMPING FORCE
#6	9.6 IN-LB +/- 10%	380 LB +/- 10%

ALLOW FOR .5" CLEARANCE ABOVE HEAT SINK

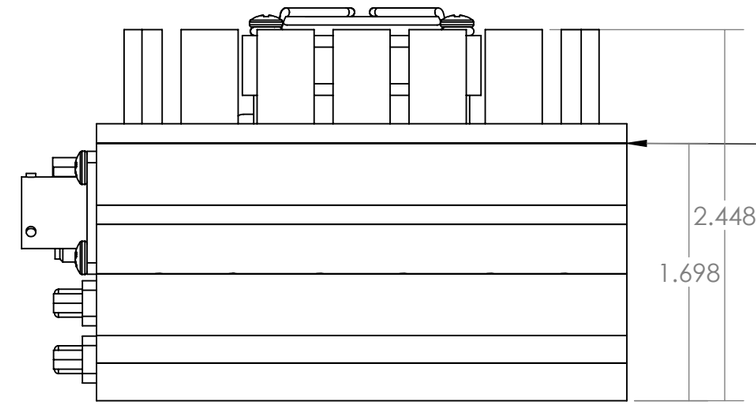

IF FACTORY HEAT SINK IS NOT INSTALLED, HEAT SINK THIS SURFACE

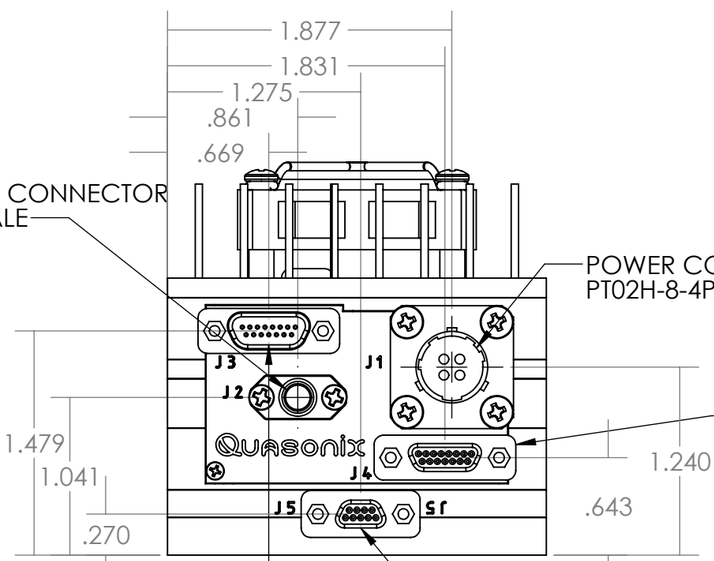

RF OUTPUT CONNECTOR
SMA FEMALE

POWER CONNECTOR
PT02H-8-4P

TRANSMITTER INTERFACE
MDM-15 MALE
M83513/03-B05N

FREQUENCY PROGRAMMING
MDM-15 FEMALE
M83513/04-B05N

ETHERNET INTERFACE
MDM-9 MALE
M83513/03-A05N

POWER	WEIGHT
XXXXXX	XX.XX OZ

PROPRIETARY AND CONFIDENTIAL

THE INFORMATION CONTAINED IN THIS DRAWING IS THE SOLE PROPERTY OF QUASONIX, LLC. ANY REPRODUCTION IN PART OR AS A WHOLEWITHOUT THE WRITTEN PERMISSION OF QUASONIX, LLC IS PROHIBITED.

NEXT ASSY	USED ON
APPLICATION	

UNLESS OTHERWISE SPECIFIED:

DIMENSIONS ARE IN INCHES
TOLERANCES:
ANGULAR: MACH ±1 BEND ±1
TWO PLACE DECIMAL ±0.01
THREE PLACE DECIMAL ±0.003

INTERPRET GEOMETRIC TOLERANCING PER:

MATERIAL

FINISH

	NAME	DATE
DRAWN	NFE	1/6/14
CHECKED	DEF	1/8/14
ENG APPR.	BJH	1/8/14
MFG APPR.		
Q.A.		

COMMENTS:

Quasonix

TITLE:
21AA

SIZE	DWG. NO.	REV
B	QSX-TX-21AA	-

SCALE: 1:1 WEIGHT: ABOVE SHEET 1 OF 1