ISO 9001:2015
Certified

Legacy Dual Telemetry Transmitter

Installation and Operation Manual

Quasonix, Inc.
6025 Schumacher Park Dr.
West Chester, OH 45069
31 January 2022

Revision 1.3.5

Specifications subject to change without notice.

All Quasonix transmitter products are under U.S. Department of Commerce jurisdiction categorized as EAR99; not covered by ITAR

Table of Contents

List of Figures

List of Tables

1 Introduction

1.1 Description

This document describes the Installation and Operation of Quasonix' Legacy Dual Telemetry Transmitters. The transmitters are designed to transmit airborne telemetry data from a test article to ground stations. The transmitters are developed, manufactured, and supported by:

Quasonix, Inc.
6025 Schumacher Park Drive
West Chester, OH 45069
CAGE code: 3CJA9

1.2 Introduction

The Legacy Dual Telemetry Transmitter provides two independent transmitters in a single package. Each transmitter can be used independently or in a variety of dual output applications such as Space-Time Coding (STC) or Frequency Diversity. The side by side design is employed in applications requiring bands that are not available in the Quasonix TIMTER™ Multi-mode Dual Telemetry Transmitter. For information regarding the Dual Transmitter, please refer to the Quasonix TIMTER™ Multi-mode Dual Telemetry Transmitter data sheet or Installation and Operation Manual.

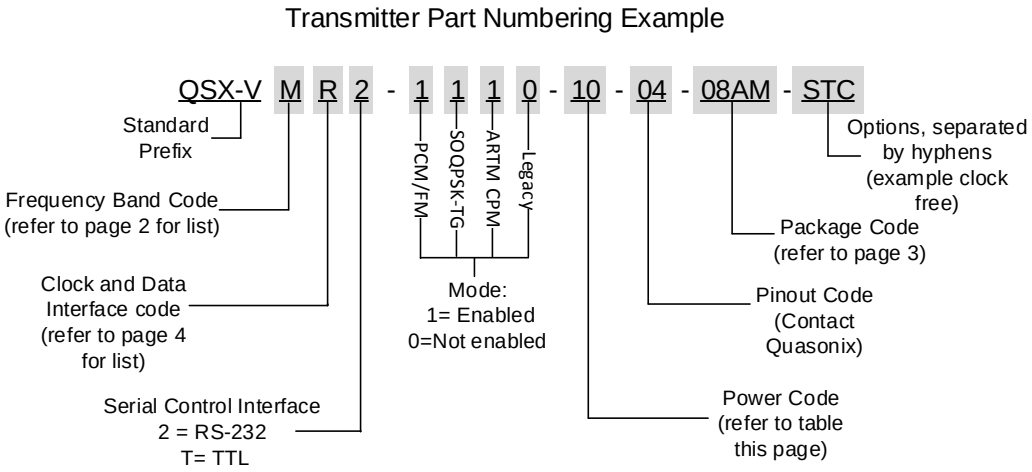

Figure 1: Example Quasonix Part Number Construction Description

In this manual, the words Terminal Control and Serial Control have the same meaning and are used synonymously throughout this manual. Serial control originates from configuring the transmitter from a computer's legacy RS-232/422 serial communications (COM) port. Terminal Control reflects the more generic case where the transmitter could be controlled by other standard computer interfaces such as Ethernet.

The available Legacy Dual Transmitter software and hardware options are listed below. Refer to section 1.3 for detailed descriptions of each option.

- AC Automatic carrier wave output
- BRx Request non standard bit rates
- C7 Quasonix interpretation of IRIG 106-17 Appendix 2-C serial control protocol
- CE Convolutional encoder (includes NRZ-M encoding)
- CF Clock-free baseband interface
- DP Dual power (Ability to set a low and a high setting, hardware controlled*
- HR Increases max bit rate up to 46 Mbps (23 Mbps for PCM/FM) (20 Mbps max for Clock Free mode)
- ID Internal Clock and Data
- LD LDPC forward error correction encoding
- LRxx Decreases min bit rate to 50 kbps (25 kbps for PCM/FM) (50 kbps min for Clock Free mode)
- PSK Adds BPSK, QPSK, OQPSK, PM/BPSK
- RG Reverse gender option for MDM-15 connector(s)
- RH Recall Holdoff
- STC Space-Time Coding
- VF Variable FIFO Depth
- VP Variable power (32 settings, spanning 24 dB), software controlled*
- VR User selectable baseband interface, switchable between RS-422 and TTL
- WV Wide input voltage range

Refer to Table 13 in section 4.2.1 for detailed descriptions of each option. Due to input connector pin count limitations, certain combinations of options are not available. Please contact Quasonix for support in ordering TIMTER™ options or for information regarding upgrades to TIMTER™ units that you may already own.

The model number identifies the configuration of the unit. For example, model number QSX-VMR2-1100-10-04-08AM-STC defines a unit configured as shown in Table 1.

Table 1: Model Configuration Example

Identifiers	Description
QSX	Quasonix product
V	Variable bit rate
M	L/S band operation
R	RS-422 interface

Identifiers	Description
2	Serial Control Interface (2) RS-232 serial control interface: 57,600 baud rate
1100	Tier 0 present, Tier I present, Tier II absent, Legacy PSK absent
10	10 Watt RF output
04	Pinout code
08AM	Package code
STC	Dual channel telemetry transmitter with Space-Time Coding (STC)

1.3 Model Number Field Codes

1.3.1 Band

Band field codes are listed in Table 2.

Table 2: Band Field Codes

Model Number Code	Band	Minimum Freq	Maximum Freq	Default Freq
M	Lower L, Upper L, and S	1435.5 MHz	2394.5 MHz	1450.5 MHz

1.3.2 Interface

Interface field codes are listed in Table 3.

Table 3: Interface Field Codes

Model Number Code	Baseband Clock and Data Interface
T	TTL (single-ended, compatible with 3.3 volt or 5 volt logic)
R	TIA/EIA-422 (formerly known as RS-422) (differential)

1.3.3 ARTM Tier 0

ARTM Tier O field codes are listed in Table 4.

Table 4: ARTM Tier 0 Field Codes

Model Number Code	PCM/FM (ARTM Tier 0)
0	Absent
1	Present

1.3.4 ARTM Tier I

ARTM Tier I field codes are listed in Table 5.

Table 5: ARTM Tier I Field Codes

Model Number Code	SOQPSK-TG (ARTM Tier I)
0	Absent
1	Present

1.3.5 ARTM Tier II

ARTM Tier II field codes are listed in Table 6.

Table 6: ARTM Tier II Field Codes

Model Number Code	Multi-h CPM (ARTM Tier II)
0	Absent
1	Present

1.3.6 Legacy PSK

Legacy PSK field codes are listed in Table 7.

Table 7: Legacy PSK Field Codes

Model Number Code	Legacy PSK
0	Absent
1	Present

1.3.7 Output Power

Output Power field codes are listed in Table 8.

Table 8: Output Power Field Codes

Model Number Code	RF Output Power
05	5 watts (+37 dBm), minimum
10	10 watts (+40 dBm), minimum

1.3.8 Power Supply

The input current and standard input voltages for all models (represented by the Power Supply field code "S") are listed in Table 9.

Table 9: Power Supply Field Codes

DC Input Current at Standard Input Voltage @ 28 VDC			
Band Type	**Wattage Per Transmitter**	**Maximum Current Per Transmitter**	**Typical Current Per Transmitter**
L/S band	5 Watt	1.2 amps	1.0 amps
L/S band	10 Watt	2.0 amps	1.5 amps

1.3.9 Package

Package code dimensions are listed in Table 10.

Table 10: Package Dimensions

Model Number Code	Package Dimensions (Excluding Connectors)
08AM	8.400 in^3, 4.000" (W) x 3.000" (L) x 0.700" (H)

Transmitter weight may vary depending on packages and applications. For information about the weight of a particular transmitter, please contact Quasonix.

1.3.10 Automatic Carrier Wave Output Option - AC

This option allows the TIMTER to transmit a carrier wave when the clock input is absent, which would normally cause the RF output to be turned off.

1.3.11 Baud Rate Option – BRx

The BR option changes the default baud rate on the transmitter to the one selected. A number from 0-7 follows the BR option request. Corresponding values are as follows: 0 = 57600; 1 = 4800; 2 = 9600; 3 = 19200; 4 = 38400; 5 = 56000; 6 = 57600; 7 = 115200.

1.3.12 CP07 Control Protocol Option – C7

The Quasonix interpretation of IRIG 106-17, Appendix 2-C serial control protocol (CP07), "provides standards for commands, queries, and status information when communicating with telemetry transmitters configured with communication ports." The Basic command set contains the minimum (required) commands for transmitter control, query, and status. The Extended command set contains optional commands that may or may not be implemented at the manufacturer's discretion. CP07 is enabled when the C7 option is requested.

The default baud rate for CP07 transmitters is 9600.

1.3.13 Convolutional Encoder Option – CE

The CE option enables convolutional encoding and NRZ-M conversion. This encoding adds redundant information to the transmitted data stream to help detect and correct bit errors that may occur, particularly due to predominantly Gaussian noise. Use of convolutional encoding requires a matching Viterbi decoder in the receiver to extract the source data. The encoded data rate will be twice the source data rate, and the occupied bandwidth will also be doubled.

Note: Data encoding is not synchronized between transmitters and cannot be used for frequency diversity.

For example, the transmitter has two encoders, one for in-phase ("I") data and one for quadrature ("Q") data. Call the input symbol stream I0/Q0, I1/Q1, … . Each encoder outputs 2 bits for every input bit, so call the output bit stream from the first convolutional encoder I0(1), I0(2), I1(1), I1(2), … , and call the output bit stream from the second convolutional encoder Q0(1), Q0(2), Q1(1), Q1(2), … . Combining the outputs of the two encoders, then, the output symbol stream is I0(1)/Q0(1), I0(2)/Q0(2), I1(1)/Q1(1), I1(2)/Q1(2), … .

For modes that do not employ Quadrature modulation, such as PCM/FM, Multi-h CPM, and BPSK, only a single encoder is used.

A single encoder is implemented exactly as described in the "Consultative Committee for Space Data Systems, Recommendation for Space Data System Standards, TM Synchronization and Channel Coding, CCSDS 131.0-B-1, Blue Book, September 2003, Section 3."

A basic convolutional encoder block diagram, as illustrated in CCSDS 131.0-B1, is shown in Figure 2.

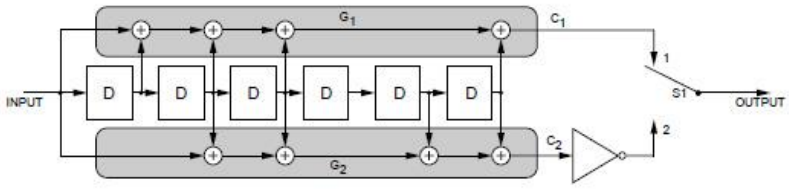

NOTES:

1. D = SINGLE BIT DELAY.
2. FOR EVERY INPUT BIT, TWO SYMBOLS ARE GENERATED BY COMPLETION OF A CYCLE FOR S1: POSITION 1, POSITION 2.
3. S1 IS IN THE POSITION SHOWN (1) FOR THE FIRST SYMBOL ASSOCIATED WITH AN INCOMING BIT.
4. ⊕ = MODULO-2 ADDER.
5. = INVERTER.

Figure 3-1: Basic Convolutional Encoder Block Diagram

"Consultative Committee for Space Data Systems, Recommendation for Space Data System Standards, TM Synchronization and Channel Coding, CCSDS 131.0-B-1, Blue Book, September, 2003," page 3-2.

Figure 2: CCSDS 131.0-B-1 Rendering of Basic Convolutional Encoder Diagram

1.3.14 Clock-free Baseband Interface Option – CF

The standard TIMTER requires external clock and data inputs. With the CF option, no external clock is required. The clock is generated directly from the data and a user- specified bit rate. When the CF option is used, the bit rate range is 50 kbps to 20 Mbps for all waveform modes.

1.3.15 Dual Power Option – DP

The standard TIMTER operates at its full rated RF output power. The DP option provides two software-programmed, hardware-actuated settings, designated by the user as “high power” and “low power”. There are 32 choices for “high power” and 32 choices for “low power”. The low power setting can provide as much as 24 dB of attenuation from the high power setting.

1.3.16 High Bit Rate Option – HR

The standard TIMTER supports bit rates from 0.1 to 28 Mbps in SOQPSK-TG and MULTI-h CPM modes, 0.05 to 14 Mbps in PCM/FM (Tier 0) mode and in all modes included with the PSK option. The HR option increases the bit rate to a maximum of 46 Mbps (23 Mbps for PCM/FM). (The maximum bit rate with a Clock Free transmitter is 20 Mbps for all modes.)

Refer to Table 11 for bit rate comparisons by mode.

Table 11: Standard Bit Rates Compared to Low/High Rate Options

	Standard Bit Rate	With Low Rate Option –LR	With High Rate Option –HR*
ARTM Tier 0 Modulation (PCM/FM)	0.05 -14 Mbps	Down to 0.025 Mbps	Up to 23 Mbps
ARTM Tier I Modulation (SOQPSK-TG)	0.1 – 28 Mbps	Down to 0.050 Mbps	Up to 46 Mbps
ARTM Tier II Modulation (Multi-h CPM)	0.1 – 28 Mbps	Down to 0.050 Mbps	Up to 46 Mbps
Legacy Modulation (BPSK)	0.05 – 10 Mbps	N/A	N/A
Legacy (QPSK, OQPSK)	0.05 – 20 Mbps	N/A	N/A

*Maximum data rates on Quasonix transmitters are limited by the equipment used to test the transmitter. Experiments and simulations suggest that the transmitters can generate "high fidelity" PCM/FM up to about 40 Mbps, and SOQPSK and ARTM CPM up to about 80 Mbps. However, our test station demodulators cannot run above the specified 23 Mbps and 46 Mbps rates, so performance above those rates is unspecified.

1.3.17 Internal Clock and Data Option – ID

The ID option allows the CS and DS user settings to be reloaded on power up or on a manual recall of a setup. Without the ID option, CS and DS are both forced to 0.

1.3.18 Forward Error Correction / Low Density Parity Check (LDPC) Option – LDPC

This option provides the Low Density Parity Check (LDPC) encoding, which is being considered for use on the iNET program. LDPC has been adopted by the Range Commander's Council, IRIG 106-17, Appendix 2-D.

Note: Data encoding is not synchronized between transmitters and cannot be used for frequency diversity.

1.3.19 Low Bit Rate Option – LR

The standard TIMTER supports bit rates from 0.1 to 28 Mbps in SOQPSK-TG and MULTI-h CPM modes, 0.05 to 14 Mbps in PCM/FM (Tier 0) mode and in all modes included with the PSK option. The LR option decreases the bit rate to a minimum of 50 kbps (25 kbps for PCM/FM). (The minimum bit rate with a Clock Free transmitter is 50 kbps for all modes.)

1.3.20 PSK Option – PSK

The standard TIMTER provides a carrier only mode. Additional PSK (Phase Shift Keying) modes are enabled when the PSK option is requested. This option includes BPSK (Binary), QPSK (Quadrature), OQPSK (Offset Quadrature), and PM/BPSK (Phase Modulation/Binary) modes. The standard TIMTER supports bit rates from 0.5 to 14 Mbps in all modes included with the PSK option.

1.3.21 Reverse Gender Option – RG

This option signifies that the gender of the primary MDM-15 connector should be reversed from the standard, which is male for a TTL interface and female for an RS-422 interface. If a second MDM-15 connector labeled "parallel control" is present, then its gender will also be reversed so that the two connectors are always of opposite gender.

1.3.22 Recall Holdoff Option – RH

If this option is enabled, AND the recall holdoff pin is held low on powerup, THEN the software will do an 'RF 0' to prevent the RF output from coming on until the user explicitly enters 'RF 1.' If the pin is high, then this option has no effect.

1.3.23 Space-Time Coding - STC

Space-Time Coding is a waveform coding technique that uses transmit diversity to avoid destructive interference in two-antenna systems with a similar bandwidth and power efficiency of SOQPSK. It has been adopted by the Range Commander's Council, IRIG 106-15, Appendix S.

1.3.24 Variable FIFO Depth Option – VF

This option enables the VF command which allows the user to set the FIFO depth on the transmitter for controlling latency time between bits in and bits out. The range is 0 to 255 with 128 being the default. If no value is entered, the current value displays.

1.3.25 Variable Power Option – VP

The standard TIMTER operates at its full rated RF output power. The software-based VP option provides 32 discrete power level settings, spanning a range of as much as 24 dB. The steps are non-uniform, but steps are typically no larger than 1.1 dB.

1.3.26 Variable Reference Level Inputs – VR

This option allows the user to choose between differential RS-422 or single-ended TTL clock and data input levels through the serial command interface. When this option is chosen, the third digit in the part number should be an "R," which is the traditional designator for RS-422 input levels. Use BT command to select TTL or RS-422. Refer to Table 13 for detailed user commands.

1.3.27 Wide Input Voltage Range Option – WV

The standard TIMTER operates from +28 ± 4 VDC. The WV option extends operating input voltage range as shown in following table.

Voltage Ranges with WV Option
+12 to +34 VDC for 5 Watt version
+21 to +34 VDC for 10 Watt version

2 Accessories

Quasonix offers a number of optional accessories for TIMTER, including a fan-cooled heat sink, a 2.5” x 3.5” adapter plate, pre-wired mating MDM-15 connectors, complete MDM-15 cable assemblies, a ruggedized handheld programmer, and a USB to serial converter cable. Contact Quasonix for pricing and availability of TIMTER accessories.

2.1 Transmitter-powered Heat Sink

Part Number: (QSX-AC-32-HS-28V-SP) **Note:** Legacy Dual Transmitter requires a heat sink quantity of two (2)

The heat sink assembly includes an integral +12 VDC fan, power supply, and temperature-controlled power on at +37°C. Fan speed is regulated to compensate for changes in air pressure/density under high altitude conditions. It operates from 22 VDC to 32 VDC and is powered by existing transmitter wiring allowing the heat sink to draw power directly from a TIMTER transmitter and eliminating the need for a separate external power supply. There are no separate power leads for the fan. An MDM-15 jumper cable is included to connect the heat sink to the transmitter. Two transmitter-powered heat sinks (2” x 3”) are required for legacy dual transmitters.

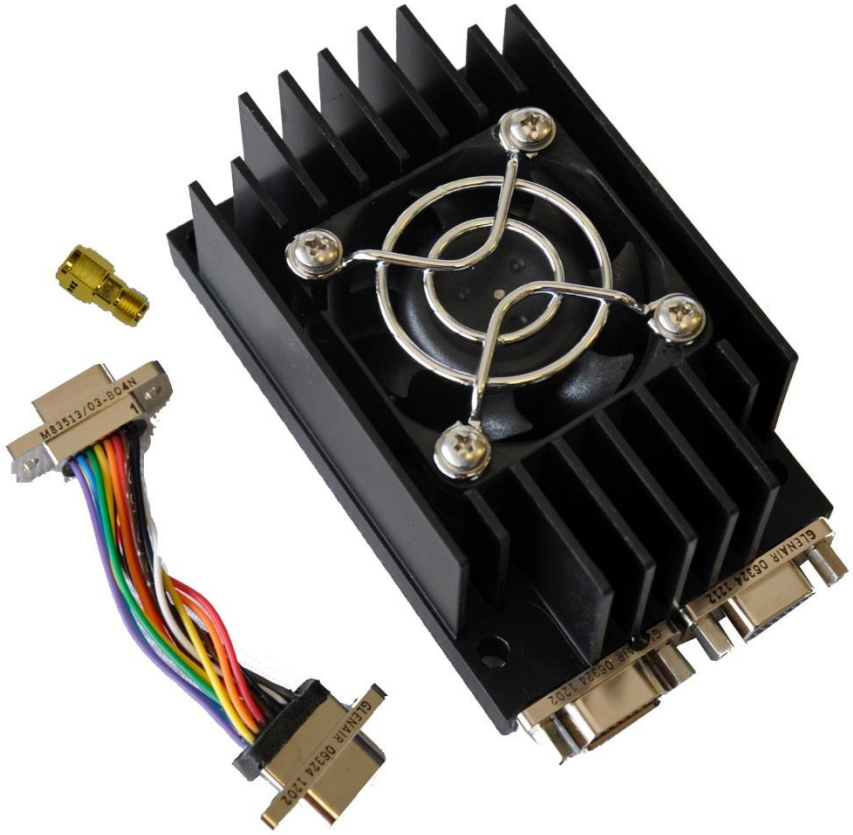

Figure 3: Transmitter-powered Heat Sink and Pigtail Cable

Figure 4: Transmitter-powered Heat Sinks Mounted on a Legacy Dual Transmitter

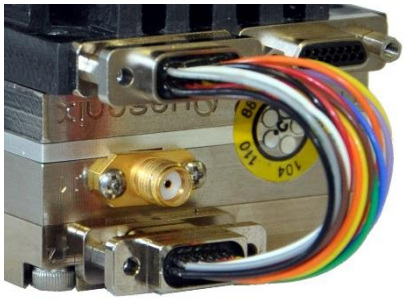

Figure 5: Close-up Using Female MDM-15 Connector

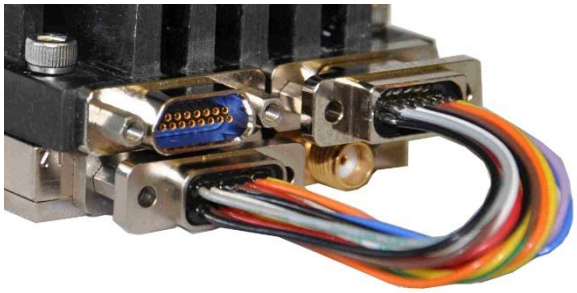

Figure 6: Close-up Using Male MDM-15 Connector

2.2 Pre-wired MDM-15 for RS-422 Units

Part Number: QSX-AC-MDM15-36-PIN

An MDM-15 connector with 36” color-coded pigtail cables for connecting to transmitters with the RS-422 clock and data baseband interface is shown in Figure 7.

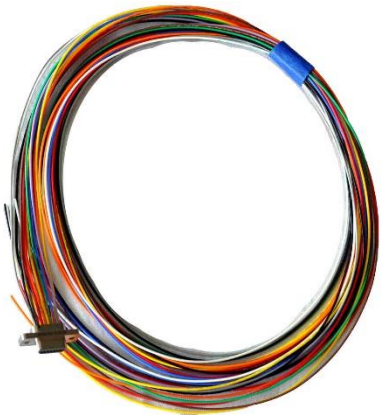

Figure 7: Pre-wired MDM-15 with 36” Pigtails for RS-422

2.3 Pre-wired MDM-15 for TTL Units

Part Number: QSX-AC-MDM15-36-SOCK

Quasonix offers an MDM-15 connector with 36” color-coded pigtail cables for connecting to transmitters with the TTL clock and data baseband interface.

Figure 8: Pre-wired MDM-15 with 36” Pigtails for TTL

2.4 MDM-15 Wiring Harness for RS-422 Units

Part Number: QSX-AC-MDM15-HARNESS-PIN

An MDM-15 wiring harness for connecting to transmitters with RS-422 clock and data baseband interface is shown in Figure 9. It includes banana plugs for power and ground, BNC connectors for clock and data, and a DB-9 connector for serial control and is 35 to 36 inches long depending on the connectors.

Figure 9: MDM-15 Cable Harness for RS-422

2.5 MDM-15 Wiring Harness for TTL Units

Part Number: QSX-AC-MDM15-HARNESS-SOCK

Quasonix offers an MDM-15 wiring harness for connecting to transmitters with TTL clock and data baseband interface. It includes banana plugs for power and ground, BNC connectors for clock and data, and a DB-9 connector for serial control and is 35 to 36 inches long depending on the connectors.

Figure 10: MDM-15 Cable Harness for TTL

2.6 Ruggedized Handheld Programmer

Part Number: QS-PROG0021050

The handheld programmer is an ultra-rugged Pocket PC with custom Quasonix software that allows the user to configure transmitters through its serial interface directly in the field. The programmer is shown in Figure 11.

Figure 11: Ruggedized Handheld Programmer

2.7 USB to Serial Converter Cable

Part Number: QSX-AC-USBSER-CONV

The 36 inch long USB to serial converter cable allows for configuration of the transmitter with a computer that does not have a serial port. The cable is pictured in Figure 12. An 18 inch long cable is also available.

Figure 12: USB to Serial Converter Cable

3 Installation Instructions

3.1 Mechanical

The Legacy Dual Telemetry Transmitter is designed to be mounted by eight (8) 6-32 screws through the holes in the four corners, as depicted in Figure 13.

Figure 13: Legacy Dual Telemetry Transmitter Mounted Example

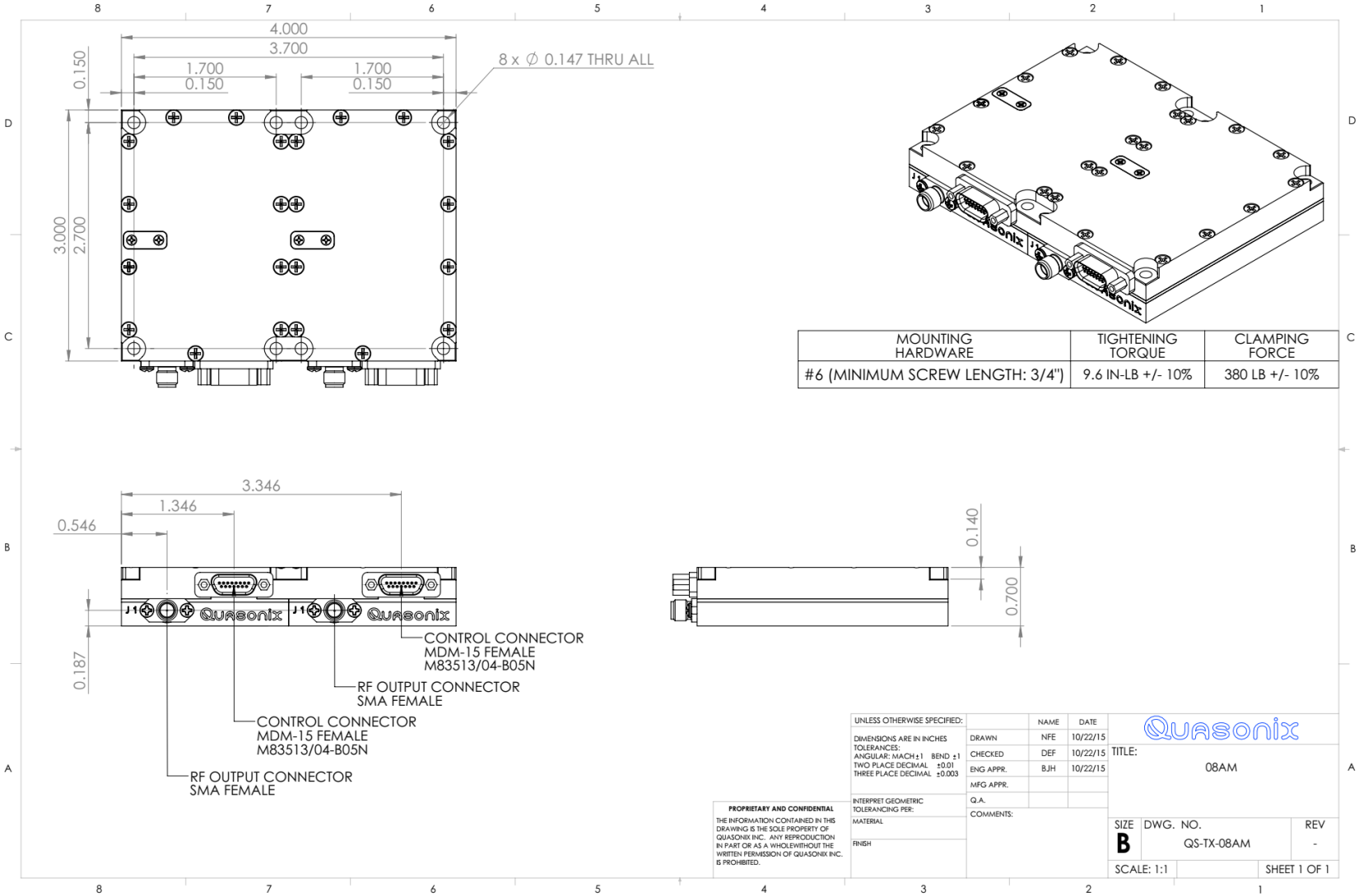

Figure 14: Outline Drawing, Legacy Dual Telemetry Transmitter

3.2 Thermal

It is important that the bottom surface (on the face opposite the product label) be securely attached to a baseplate capable of dissipating the power produced by the transmitter model in use. This mounting baseplate must be flat, smooth, and clean. Contact Quasonix for the heat sink power dissipation required for your transmitter model.

ATTENTION: Do not operate the transmitter without a proper heat sink. Failure to do so may lead to permanent damage to the unit and will void the warranty. Overheating can occur in a matter of seconds when a transmitter is not properly heat-sinked. In absolutely no case should any type of stickers or labels be applied to the bottom surface of the transmitter.

The heat sink required for a particular transmitter depends heavily on the installation. Factors such as altitude, air temperature, air flow, and mass of the mounting surface all have a substantial impact on the flow of heat away from the transmitter. Quasonix offers several types of integrated and add-on heat sinks (refer to Section 2). Please contact Quasonix for heat sink recommendations for your particular TIMTER transmitter.

Regardless of the heat sink, Quasonix strongly suggests using a thermal pad, such as Q-Pad® II from Bergquist.

3.3 Electrical

The Legacy Dual Telemetry Transmitter consists of two individual units mounted side by side and connected internally. The information regarding electrical characteristics, operation, and performance that follows refers to each transmitter individually.

The pin numbering and wiring for the MDM-15 female connector used with pinout code “04” (TIA/EIA-422 interface) is shown in Figure 16. To illustrate the difference in the TTL interface, the pin numbering and wiring for the MDM-15 male connector with pinout code “03” is shown in Figure 17.

A side by side comparison of the pin assignments is provided in Table 12.

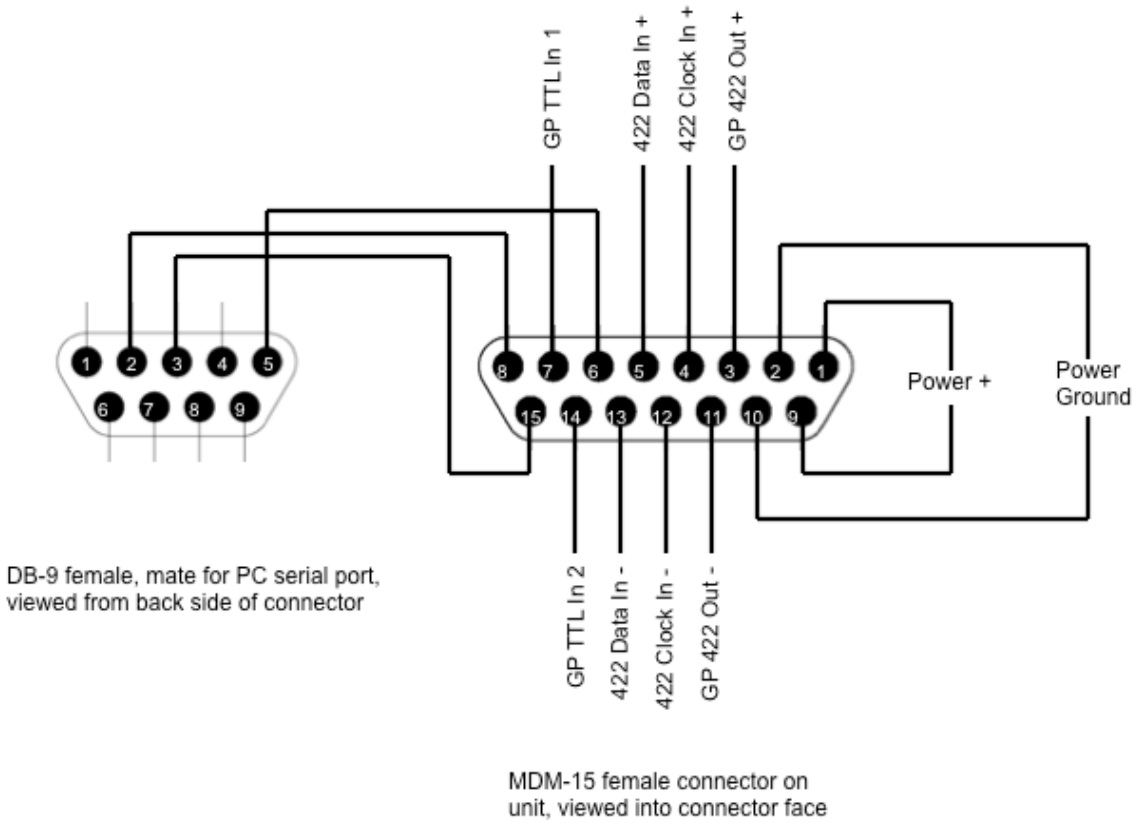

Figure 15: MDM-15 Female Pin Numbering, TIA/EIA-422 (RS-422) Interface – 04 Pinout

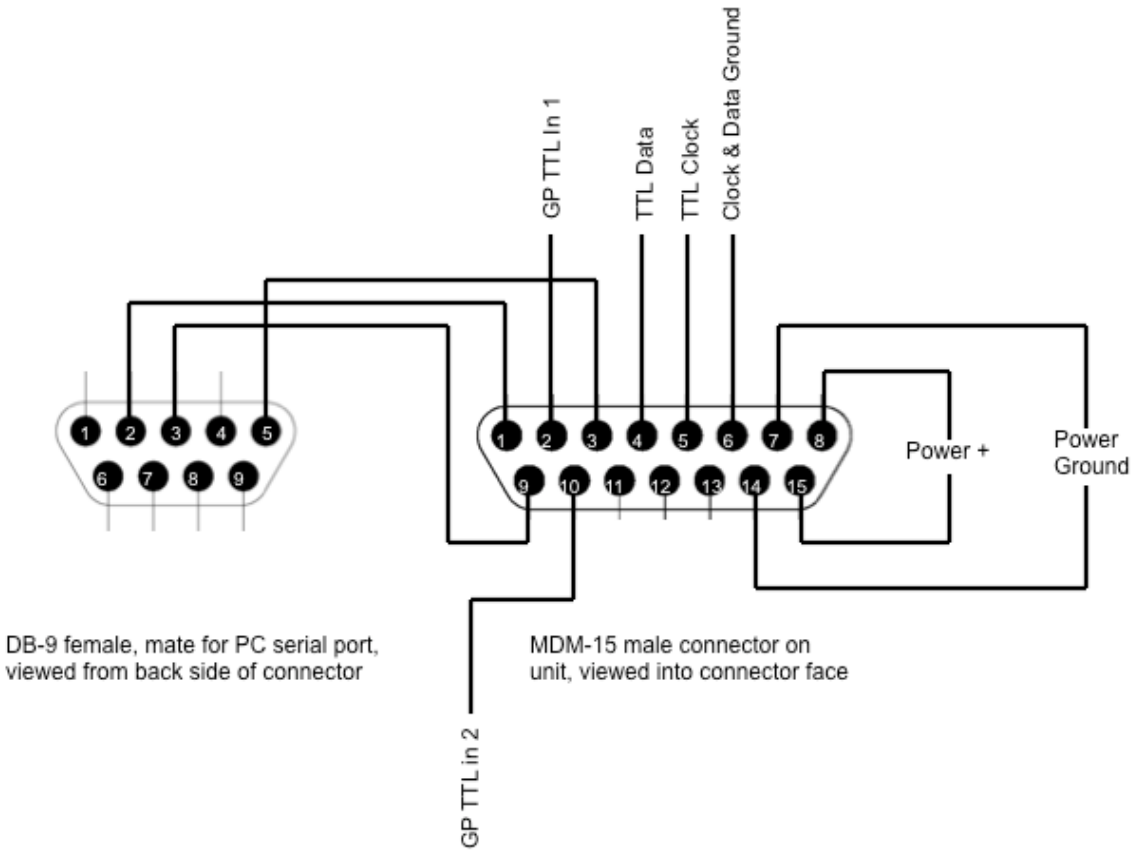

Figure 16: MDM-15 Male Pin Numbering, TTL Interface – 03 Pinout

The pin assignments for both interfaces are listed in Table 12. These pin assignments can change, depending on the options selected. Consult Quasonix for details.

Table 12: Transmitter Pin Assignments

Pin	TIA/EIA 422 Interface MDM-15 Female- Pinout Code 04	TTL Interface MDM-15 Male – Pinout Code 03
1	Power +	Serial Control Reply (Transmitter TXD)
2	Power Ground	RF On / Off*
3	N/C	Serial Control Ground
4	422 Clock +	TTL Data
5	422 Data +	TTL Clock
6	Serial Control Ground	TTL Data/Clock Ground

Pin	TIA/EIA 422 Interface MDM-15 Female- Pinout Code 04	TTL Interface MDM-15 Male – Pinout Code 03
7	RF On / Off	Power Ground
8	Serial Control Reply (Transmitter TXD)	Power +
9	Power +	Serial Control Input (Transmitter RXD)
10	Power Ground	N/C
11	N/C	N/C
12	422 Clock -	N/C
13	422 Data -	N/C
14	N/C	Power Ground
15	Serial Control Input (Transmitter RXD)	Power +

The data is sampled on the falling edge of the clock, as shown in Figure 17.

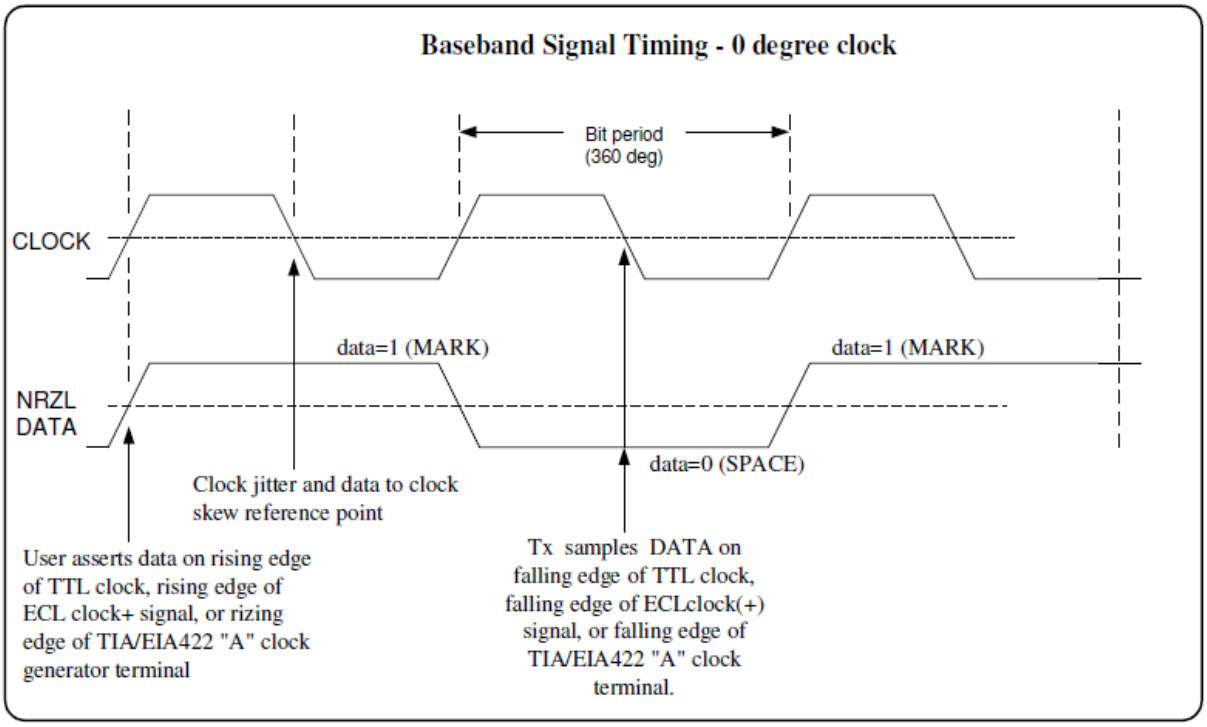

Figure 17: Baseband Signal Timing

4 Operating Instructions

4.1 Power-on Operation

Upon power up, the transmitter loads any stored parameters present in its nonvolatile memory. If parameters have not been stored previously, the transmitter initializes default parameters and then stores them in the first preset slot, 0. There are a total of 16 available software-based presets (0 through 15) for saving multiple parameters at once for future use.

4.1.1 Dual Power via Hardware Control

When the dual power option (DP) is specified, the transmitter uses the hardware pin to switch between the low power setting and the high power setting.

When the pin is left floating or pulled high (logical 1), the transmitter enters the high power mode. When the pin is grounded (logical 0), the transmitter enters the low power mode.

4.2 TIMTER Serial Control Protocol

There are two independent serial control interfaces, one for each transmitter. For proper operation in frequency diversity, settings (other than frequency) must generally be identical between the two transmitters.

When in Serial Control (Terminal) mode, the TIMTER is controlled via a simple three-wire serial interface (transmit, receive, and ground). The serial port configuration is as follows:

- 57600 baud rate (changeable depending on the configuration option)
- 8 bits
- No parity
- 1 stop bit
- No flow control

For setup and configuration via a standard Windows-based PC, you may use HyperTerminal. For a more flexible, full-featured control interface, we recommend Terminal, available for download from the Quasonix website (Documents tab > Accessories link) or directly at:
http://www.quasonix.com/sites/default/files/terminal_ver20080315.zip.

If the terminal program is active when power is applied to the transmitter, the following welcome message displays, as shown in Figure 18. At this point, you can verify that your serial connection is active in both directions by issuing any standard command, such as “FR” to learn the frequency.

```
Quasonix Multi-Mode Digital Transmitter

Customer Part # = QSX-xxx-xx-xx…
Customer Name = Quasonix Customer
Contract # = 999999-9
TX Serial # = 99999999
Hardware Rev: B
PA Rev: No PA
IRIG 106-09
6025 Schumacher Park Drive
West Chester, OH 45069
(513) 942-1287
www.Quasonix.com
CAGE CODE: 3CJA9
FPGA version:  0x07110004
Firmware version: V2.116  5/22/2009
```

Figure 18: TIMTER Welcome Message

4.2.1 Command Set: Standard and Optional Commands

All standard and optional user commands in Table 13 consist of one or two alphabetic characters, followed by 0, 1, or 2 arguments. If the command is issued with arguments, there must be a space after the alphabetic characters. The commands are not case sensitive. A carriage return is required to initiate each command except for the single key commands described at the beginning of the table.

Most parameters set by these commands are stored in the unit's nonvolatile flash memory (CS and DS are the exception). On power-up, ALL settings are restored from preset 0, which is the default power on configuration. If the parallel interface is active, then any applicable configuration settings are read from the parallel port and updated accordingly after the initial power on sequence is completed. Refer to the Startup Configuration command (SC) for exceptions.

All settings can be changed via the serial control port; however, parallel port settings will in general override the serial port settings. However, configurations can only be saved from the serial control port. Changes made by the user via either method are NOT saved unless the Save command (SV) is issued from the serial control port before powering down.

***SV Note:** Users may save internal clock and data in presets for bench debug use BUT on a power up or when a *hardware* preset is restored, **CS** and **DS** will be forced to **0** (external clock and data). This action prevents a transmitter from powering up or changing hardware presets and being set to internal clock and/or data. The ONLY way to restore CS and/or **DS** as **1** from a saved configuration is by executing the **RC** command.

Table 13: Standard and Optional User Commands

Mnemonic Command	Name	Description	Option (s) Required	Setting Saved?	Factory Default
[	Frequency Step Down	Left square bracket key retunes the transmitter to the next lower frequency, as determined by the frequency step (FS) parameter Reply to the control window is the new frequency, in MHz **No Enter key required**	Standard	N/A	N/A
]	Frequency Step Up	Right square bracket key retunes the transmitter to the next higher frequency, as determined by the frequency step (FS) parameter Reply to the control window is the new frequency, in MHz **No Enter key required**	Standard	N/A	N/A
?	Help	Displays abbreviated list of available commands **No Enter key required**	Standard	N/A	N/A
<	Step Down Power	Incrementally steps down the output power level, from 31 down to 0 One step per key press **No Enter key required**	VP	N/A	N/A
>	Step Up Power	Incrementally steps up the output power level, from 0 up to 31 One step per key press **No Enter key required**	VP	N/A	N/A
AC	Automatic Carrier Output	Report or set automatic carrier output state With automatic carrier ON (AC 1), the unit will output an unmodulated, on-frequency carrier if there is no clock present. When automatic carrier is OFF (AC 0), the RF output will be muted in the absence of clock. Note that the AI, CF, and CS commands can create a clock, even when one is not externally applied. Examples: AC Report the automatic carrier state AC 0 Set automatic carrier OFF AC 1 Set automatic carrier ON	AC	N	AC 1

Mnemonic Command	Name	Description	Option (s) Required	Setting Saved?	Factory Default
BR	Bit Rate	Used when the Clock Free (CF) option is specified and internal transmitter clock is in use Report or set the bit rate of the bit sync that is locking to the externally applied data Not to be confused with “IC”, which sets the rate of the internally generated clock Bit rate range is 50 kbps to 20 Mbps for all waveform modes Examples: BR Report the bit rate BR 5 Set the bit rate to 5 Mbps BR 19.5 Set the bit rate to 19.5 Mbps	CF	Y	BR 5
BT	Baseband Interface Type	Report or set the clock and data input reference levels Clock and data interfaces are set to either TTL or RS-422. Clock interface and data interface are always the same type. Examples: BT Report the ref level BT 1 Set the baseband type to TTL BT 3 Set the baseband type to RS-422	VR	Y	BT 3

Mnemonic Command	Name	Description	Option (s) Required	Setting Saved?	Factory Default
CC	Convolutional Encoder	Enables or disables the convolutional encoder Examples CC Report convolutional encoder state CC 0 Set the convolutional encoder to Disabled CC 1 Set the convolutional encoder to Enabled Note: Data encoding is not synchronized between transmitters and cannot be used for frequency diversity.	CE	Y	CC 0
CF	Clock Free	Report or set the clock free state Examples: CF Report the clock free state CF 0 Unit uses its internal bit sync (internally synthesized) CF 1 Unit uses its externally applied clock	CF	Y	CF 1
CP	Clock Polarity	Report or set clock polarity Examples: CP Display the current clock polarity CP 0 Set clock polarity to NOT inverted CP 1 Set clock polarity to inverted CP A Set clock polarity to auto; Automatically selects the most reliable clock edge	Standard	Y	CP 0
CR	Current Preset Read	Reports the currently selected software preset being used by the transmitter	Standard	N/A	N/A

Mnemonic Command	Name	Description	Option (s) Required	Setting Saved?	Factory Default
CS	Clock Source	Report or set the clock source Unit always reverts to CS 0 (external) at power-up Examples: CS Display the current clock source CS 0 Set clock source to external CS 1 Set clock source to internal When set to internal clock source, the data source must also be set to internal via the DS command in order to have synchronous, usable data.	Standard	N	CS 0
DE	Differential Encoding	Report or set differential encoding for the SOQPSK-TG or other PSK mode (Differential encoding typically disabled for other modes) If LDPC enabled, DE resets to 0 Examples: DE Report the differential encoding setting DE 0 Set differential encoding OFF DE 1 Set differential encoding ON DE must be set to OFF for STC	Standard	Y	DE 1
DP	Data Polarity	Report or set data polarity Examples: DP Display the current data polarity DP 0 Set data polarity to NOT inverted (OFF) DP 1 Set data polarity to inverted (ON)	Standard	Y	DP 0

Mnemonic Command	Name	Description	Option (s) Required	Setting Saved?	Factory Default
DS	Data Source	Report or set data source state Unit always reverts to DS 0 (external) at power-up Examples: DS Display current data source DS 0 Set data source to external DS 1 Set data source to internal (value of internal source is set by ID command)	Standard	N	DS 0
FR	Frequency	If no argument is passed, it reports the frequency. If an argument is passed, it sets the frequency. The argument specifies the frequency in MHz. If the command is entered with a '?', then the allowed frequency ranges for this unit display. This command rounds the frequency to the nearest 0.5 MHz. If the rounded frequency is within one of the transmitter's allowed bands, the transmitter will tune that frequency and confirm the change for the user. If the frequency is outside of the allowed range for the unit, the transmitter will NOT retune but will report an error to the user. Examples: FR Display the current frequency FR ? Display allowed frequency ranges FR 1436.5 Set frequency to 1436.5 MHz	Standard	Y	FR 1436.5

Mnemonic Command	Name	Description	Option (s) Required	Setting Saved?	Factory Default
FS	Frequency Step	If no argument is passed, it reports the current frequency step. If an argument is passed, it sets the frequency step size, which is activated by the left and right square bracket keys. The argument specifies the frequency step in MHz, with 0.5 MHz being the smallest available step. Examples: FS Display the current frequency step FS 1 Frequency step = 1 MHz	Standard	Y	FS 1
H or HE	Help	Displays a list of available commands Commands require a carriage return at the end of the line and may also accept parameters Some commands may not be enabled depending on required options	Standard	N/A	N/A
HP	High Power	Report or set high power level Valid range is 0-31 in 1 dB steps or 0-31.5 in 0.5 dB steps, depending on the transmitter Examples: HP Report the present high power level HP 31 Set high power to 31	DP	Y	HP 31
HX	eXtended Help	Displays a full list of available commands	Standard	N/A	N/A

Mnemonic Command	Name	Description	Option (s) Required	Setting Saved?	Factory Default
IC	Internal Clock Rate	Report or set the internal clock rate This rate is used if the clock source is set to internal (CS 1) and the data source is set to internal (DS 1). It should not be confused with “BR”, which sets the rate of the internal bit sync, which phase locks to the externally applied data. If no argument is passed, the unit reports the clock frequency. If a valid frequency is given, the internal clock frequency is set. The frequency is in Mbps. Examples: IC Display current internal clock rate IC 4.95 Set internal clock rate to 4.95 MHz Valid range is 0.002 MHz – 28.0 MHz Observes same bit rate limits as HR/LR commands (PCM/FM half)	Standard	Y	IC 5

Mnemonic Command	Name	Description	Option (s) Required	Setting Saved?	Factory Default
ID	Internal Data Gen	Report or set the internal data pattern This setting is used if the Data Source is set to internal (DS 1) and the Clock Source is set to internal (CS 1). When setting the data, the argument must be “PN6” (or “PN06”), “PN11”, “PN15”, or “PN23”, or a valid 4 digit hexadecimal value. Examples: ID Report the internal data pattern ID PN15 Set internal data pattern to PN15 ID AA55 Set internal data pattern to 0xAA55 In SOQPSK mode, ID 5555 or ID AAAA will result in an unmodulated carrier, at the nominal carrier frequency. Note: If the CP07 option is present, the input argument does not include the “PN” and a hexadecimal value requires the addition of a leading “x”, as shown in the following example. CP07 Examples: ID Report the internal data pattern ID 15 Set internal data pattern to PN15 ID xAA55 Set internal data pattern to 0xAA55	Standard	Y	ID PN15

Mnemonic Command	Name	Description	Option (s) Required	Setting Saved?	Factory Default
LC	List Configurations	Lists the stored configurations on the unit If a configuration number is supplied, then the saved parameters for that configuration are displayed. Examples: LC List all internal saved configurations LC 7 Show configuration 7 details	Standard	N/A	N/A
LD	LDPC Encoding Enable	Enable, disable, or show the current state of the Forward Error Correction (FEC) / Low Density Parity Check (LDPC) encoder Examples: LD Show the current encoder state LD 1 Enable the LDPC encoder LD 0 Disable the LDPC encoder Note: Data encoding is not synchronized between transmitters and cannot be used for frequency diversity.	LDPC	Y	LD 0
LP	Low Power	Report or set low power level Valid range is 0-31 in 1 dB steps or 0-31.5 in 0.5 dB steps, depending on the transmitter Examples: LP Report the present low power level LP 3 Set low power to 3	DP	Y	LP 0
MA	Modes Allowed	Reports the modes enabled on the transmitter, as determined by the part number	Standard	N/A	N/A

Mnemonic Command	Name	Description	Option (s) Required	Setting Saved?	Factory Default
MC	NRZ-M Conversion	Enables or disables the NRZ-L to NRZ-M conversion Examples: MC Show the current NRZ state MC 1 Enable the NRZ-L to NRZ-M conversion MC 0 Disable the NRZ-L to NRZ-M conversion	CE	Y	MC 0
MO	Modulation	Report or set modulation setting Mode 6, Carrier only, is present on every transmitter Examples: MO Report the modulation setting MO 0 Set modulation to PCM/FM MO 1 Set modulation to SOQPSK-TG MO 2 Set modulation to MULTI-h CPM MO 6 Carrier only, no modulation	Standard	Y	MO 0 or the first one the customer has installed on the unit Example: MO 1 if no PCM/FM installed; MO 2 if only CPM installed
OC	Overtemperature Control Enable	Enables or disables overtemperature control OC 0 Disable Overtemperature Control OC 1 Enable Overtemperature Control If the transmitter temperature goes above the set limit stored on the device and the current power level is over 25, the transmitter automatically starts to back off power in 2 dB steps to a maximum of 6 dB.	Standard	Y	OC 1

Mnemonic Command	Name	Description	Option (s) Required	Setting Saved?	Factory Default
PL	Power Level	PL reports or sets the current power level setting for the dual power feature. If the user enters 1, the power level is set to current "high" power level (refer to HP command). If the user enters 0, then power is set to the current "low" power level (refer to LP command). Examples: PL Report the current power level state PL 0 Set the current power level to "low" PL 1 Set the current power level to "high"	DP	Y	PL 0
PR or RE	Restore Defaults	Restores factory default parameters for the unit Default is currently the lowest number modulation supported by the transmitter with the selected band and frequency limits Default power level is Full power	Standard	N/A	N/A
QA	Query All	Displays common device settings in one compact display Display is a subset of SS or ST	Standard	N/A	N/A
QT or TE	Query Temperature	Report the temperature in degrees Celsius	Standard	N/A	N/A
RC (or PP or RL)	Recall Configuration	Load a saved configuration into the active configuration if the configuration number entered is valid If the selected configuration has no valid data or the command is issued without a configuration number, the transmitter is initialized with the default data and saved. Example: RC Load configuration 0 (default setup) RC 3 Load configuration 3	Standard	N/A	N/A

Mnemonic Command	Name	Description	Option (s) Required	Setting Saved?	Factory Default
RF	RF Output	Report or set RF output control state Note that there may be no RF output, even if the software control is set to ON. This can happen if there is no valid clock in use, or if the RF On/Off hardware pin is in the OFF state. Examples: RF Report the RF output state RF 0 Set RF output OFF RF 1 Set RF output ON	Standard	Y	RF 1 (if option CP07, default is RF 0)
RN	Randomizer	Report or set IRIG-106 randomizer output state Examples: RN Report the randomizer state RN 0 Set randomizer OFF RN 1 Set randomizer ON Note: Data encoding is not synchronized between transmitters and cannot be used for frequency diversity.	Standard	Y	RA 0

Mnemonic Command	Name	Description	Option (s) Required	Setting Saved?	Factory Default
RZ	RF On/Off Pin Polarity	Set or show the polarity of the RF On/Off pin, which is pulled high internally to 3.3 VDC RZ 0 means the RF is ON when the RF On/Off pin is low RZ 1 means the RF is ON when the RF On/Off pin is high (floating) Examples: RZ Show the current RF On/Off polarity RZ 0 Set RF On/Off polarity to “pin low = on” RZ 1 Set RF On/Off polarity to “pin high = on” The default polarity on most Quasonix transmitters is *high*. The RF On/Off pin is a hard OFF control. No matter what state everything else is in, setting this switch input to the inactive state will turn RF Off.	Standard	Y	RZ 1
SE	Space-Time Coding	Report or set Space-Time Coding (STC) Examples: SE Display current state SE 0 STC disabled SE 1 STC enabled Must be in SOQPSK mode to use Must disable Differential Encoder using the DE 0 command	Standard	N/A	N/A
SN	Serial/Part Number	Report the serial number and part number for the unit	Standard	N/A	N/A

Mnemonic Command	Name	Description	Option (s) Required	Setting Saved?	Factory Default
SO	Set Channel	Report or set the Master/Slave clock and data priority Examples: SO Display the current state SO 0 Set channel as Slave SO 1 Set channel as Master Must be in SOQPSK mode to use Setting both channels to SO 0 provides independent operation of each transmitter/channel. Independent clock and data can be provided to each MDM-15 connector J1 and J2. Either channel can be set to be the Master. By default the transmitters ship with the right transmitter as the Master and the left as Slave. Clock and data must be provided only to the Master.	Standard	N/A	N/A
SS	Show Settings	Displays most of the common device settings in one compact display	Standard	N/A	N/A
ST	Show Settings Alphabetical	Displays available device settings alphabetically in one compact display	Standard	N/A	N/A
SV or SA (or PS or PW)	Save Configuration	Saves the current transmitter configuration to a user-selected preset number, from 0 to 15 where 0 is the power-on default unless hardware presets are enabled The SV command also allows the user to assign an alias to the desired preset. Examples: SV 1 Save current configuration to preset 1 SV 7 xyz Save current configuration to preset 7 and assign alias name “xyz” *Refer to SV Note below for exception	Standard	N/A	N/A

Mnemonic Command	Name	Description	Option (s) Required	Setting Saved?	Factory Default
SY	System Status	Displays the system status of the transmitter The first argument specifies the period, in milliseconds, between status updates. Zero (0) disables continuous monitoring. The second argument specifies the number of status lines between header outputs. Examples: SY Displays current status report settings SY 5 Sets status output period to 5 milliseconds SY 5 100 Sets status header output once every 100 status updates	Standard	N/A	N/A
VE (or RV)	Version (Revision Information)	Report the current Firmware (software) version information for the transmitter	Standard	N/A	N/A
VF	Variable FIFO Depth	Sets the FIFO depth for controlling latency time between bits in and bits out Valid range is 0 to 255 Example: VF 120 (120 = Variable Power)	VF	Y	VF 128
VP	Variable Power	Report or set variable power level Valid range is 0-31 in 1 dB steps or 0-31.5 in 0.5 dB steps, depending on the transmitter Examples: VP Report the variable power level VP 31 Set variable power to 31 VP 5 Set variable power to 5	VP	Y	VP 0
ZX	Show Preset Inputs	Displays the current preset inputs on the parallel connector Available presets depend on the number specified for the unit Values are PS2, PS4, PS8, or PS16	Standard	N/A	N/A

Mnemonic Command	Name	Description	Option (s) Required	Setting Saved?	Factory Default
ZY	Show Connector	Displays the transmitter's baseband connector pinout with proper gender, numbering, and signal labeling Valid only with standard 15-pin transmitters	Standard	N/A	N/A
ZZ	Show Options	Displays the current hardware configuration and options on the transmitter	Standard	N/A	N/A

All commands generate a response of one or more lines, which indicate successful completion of the command or an error.

After a command's response, the transmitter displays the mode name followed by the character ">" as a prompt, which may be interpreted as meaning the radio is ready to accept new characters. If the CP07 option is enabled, only the character ">" displays as a prompt.

***SV Note:** Users may save internal clock and data in presets for bench debug use BUT on a power up or when a *hardware* preset is restored, **CS** and **DS** will be forced to **0** (external clock and data). This action prevents a transmitter from powering up or changing hardware presets and being set to internal clock and/or data. The ONLY way to restore CS and/or **DS** as **1** from a saved configuration is by executing the **RC** command.

5 RF Output Notes

There are three methods of muting the RF output. If you do not have RF output, check these conditions:

1. RF On / Off command – From the control terminal, type **RF** to query the current state of the RF On/Off variable. If it is 0, type **RF 1** to turn the output back ON.
2. External clock removal – If the unit is configured to use the external clock (CS = 0), that clock's presence is detected.If it is not present AND the unit is not running in Clock Free mode, the RF output automatically shuts OFF (unless the AC or ACS option is present, in which case the RF output switches to just a carrier at the center frequency with no modulation on loss of clock). When the data clock comes back, the RF output automatically turns on. The lag from data clock state change to RF output change is about 0.1 seconds, but varies based on settings.

   If the unit IS running in Clock Free mode, no clock is required, but the loss of data transitions is detected. This will cause the RF to shut OFF (or if AC or ACS option and AC is set to 1, change to a carrier on center frequency). When the data transitions begin again (or when an external clock is reapplied if NOT in Clock Free mode), the RF output turns on again.
3. RF On / Off pin – The RF On / Off pin is a hard OFF control for the RF output. The polarity of this pin is selectable using the RZ command. The RF On /Off pin (in the inactive state) forces RF OFF; the RF On /Off pin can only allow RF to turn on, but it cannot force it to turn on.

   If RZ = 1 then a high level on the RF On / Off pin allows RF On.
   If RZ = 0, then a low level (ground the RF On / Off pin) allows RF On.

   The RZ command is described in section 4.2.1.

5.1 Troubleshooting the RF on a Quasonix Transmitter

The following is a quick, three-part test to verify that the RF output on the transmitter is working correctly. This procedure should work for most transmitters with no modifications, however the sheer number of extra options and variations means that some units will need some special instructions or may work slightly differently. Examples are auto-carrier (-AC option), clock free (-CF option) and recall-holdoff (-RH option). If the procedure below does not demonstrate the working RF output on the transmitter, please contact Quasonix technical support for further help in resolving the issue.

The three sections below demonstrate RF output functionality one step at a time: first a carrier, then a waveform based on internal clock and data, and finally the waveform using the user supplied external clock and data. Part one demonstrates a simple carrier output at the desired frequency. Part two demonstrates proper waveform modulation using internal clock and data generated by the transmitter itself. Part three switches to the user supplied external clock and data for normal operation. If the first two parts work correctly, then the only missing piece is the external clock and data, so resolving any final issues becomes easier.

Part 1: Checking for carrier power output on frequency

1. Turn on power to the transmitter.
2. Set the mode to 6 (carrier only) using command **MO 6**.
3. Set transmitter to the desired frequency using the **FR** command. For example, **FR 2200.5**.
   - To see the allowed frequencies on your unit, type **FR ?**.
4. Turn the soft RF control on with **RF 1**.

5. Use a Spectrum Analyzer to determine whether there is a stick at the desired frequency. If there is, go on to Part 2.
6. If there is no output, check the state of the RF On/Off pin.
   - If the pin appears to be in the correct state to enable the output, check the RF On/Off pin polarity using the **RZ** command.
   - If the polarity is incorrect, change it.
     - **RZ 1** sets the transmitter output to turn ON when the RF On/Off pin is high (3.3 VDC).
     - **RZ 0** sets the transmitter output to turn ON when the RF On/Off pin is low.

Is the output present now? If so, go on to Part 2 below. If not, call Quasonix for technical support.

Part 2: Verifying modulation output on frequency with internal data

1. Turn on the transmitter.
2. Set the mode to one of the available modes on your unit. For example, **MO 0** for PCMFM, **MO 1** for SOQPSK, etc.
3. Set transmitter to the desired frequency using the **FR** command. For example, **FR 2200.5**.

   To see the allowed frequencies on your unit, type **FR ?**.
4. Turn the soft RF control ON with **RF 1**.
5. Enable the internal clock source with **CS 1**.
6. Enable the internal data source with **DS 1**.
7. Set the internal clock rate to 5 Mbps with **IC 5**.
8. Set the internal data pattern to PN15 with **ID PN15**.
9. Use a spectrum analyzer to verify the desired waveform on the RF output at the desired frequency.
10. If the waveform is NOT present, check the state of the RF On/Off pin. Use the **RZ** command to check the current polarity of the RF On/Off pin.
    - **RZ 1** sets the transmitter output to turn ON when the RF On/Off pin is high (3.3 VDC).
    - **RZ 0** sets the transmitter output to turn ON when the RF On/Off pin is low.
11. Change either the RF On/Off pin or the polarity to turn the RF output ON.
12. Check for the RF output on the spectrum analyzer.
    - Is the output present now? If so, go on to Part 3.
    - If not, call Quasonix for technical support.

Part 3: Verifying modulation output on frequency with user data

1. Turn on the transmitter.
2. Set the mode to one of the available modes on your unit. For example, **MO 0** for PCMFM, **MO 1** for SOQPSK, etc.
3. Set transmitter to the desired frequency using the **FR** command. For example, **FR 2200.5.**

   To see the allowed frequencies on your unit, type **FR ?**.

4. Turn the soft RF control on using **RF 1**.
5. Disable the internal clock source with **CS 0**. This is the normal state on power up for most units.
6. Disable the internal data source with **DS 0**. This is the normal state on power up for most units.
7. Be sure that a clock source is connected to the correct pins of the transmitter input connector with the correct type (TTL or RS-422) of signal and in the case of RS-422, the correct polarity.
8. Be sure that the clock source is ON and that the clock rate is within the allowed range for the mode selected. Typically this is 100 kbps to 28 Mbps for Tier 1 and 2 waveforms and 50 kbps to 14 Mbps for Tier 0.
9. Be sure that a data source is connected to the correct pins, with the correct type (TTL or RS-422) and polarity as above.
10. Use a spectrum analyzer to verify the desired waveform on the RF output at the desired frequency.
11. If the waveform is NOT present, check the state of the RF On/Off pin. Use the **RZ** command to check the current polarity of the RF On/Off pin.
    - **RZ 1** sets the transmitter output to turn ON when the RF On/Off pin is high (3.3 VDC).
    - **RZ 0** sets the transmitter output to turn ON when the RF On/Off pin is low.
12. Change either the RF On/Off pin or the polarity to turn the RF output ON.

You may issue the RF command and observe the status which is returned. This status indicates whether the transmitter believes the RF output is actually ON or not.

The **SY** command may be issued to check the actual clock rate that the transmitter sees if no RF output is detected. One of the most common problems is a clock rate that is too high or too low (or missing) for the desired modulation.

Finally, if you have a full RF loop running with a BERT and are having trouble achieving a zero bit error rate or lock, try the loop using internal data with the standard PN15 bit pattern. Be sure the BERT pattern is set to match the selected data pattern (**ID** command) on the transmitter. Assuming the internal data syncs and produces a zero bit error rate, you can switch back to the external clock and data. In this case, you can also check (and change) the clock polarity (**CP**) the data polarity (**DP**), the randomizer (**RA**), and the differential encoder (**DE** - normally on for SOQPSK and off for other waveforms) to resolve the sync and bit error rate issues.

If you are still having difficulties at this point, then contact Quasonix technical support.

Quasonix Technical Support
(1-513-942-1287) or email (support@quasonix.com)

When calling technical support, it will speed things up if you have the following information handy:

- Model number (obtained with the **ZZ** command) ***Note that this is different from the customer part number.***
- Serial number (obtained with the **SN** command)
- Software Version (obtained with the **VE** command)

It is also helpful if you can call from a phone in your lab so our tech support people can actually walk you through setting, checking, and controlling your transmitter).

6 Performance Specifications

6.1 RF Output

The minimum RF output power is one of the following: 5 W, 10 W, or 20 W, with the RF load VSWR < 2:1 at all phase angles from 0 to 360 degrees.

6.2 Electrical Current

The electrical current drain for all TIMTER Legacy Dual Transmitters is provided in Table 14.

Table 14: DC Input Current at Standard Input Voltage

Band Type	Wattage Per Transmitter	Maximum Current Per Transmitter	Typical Current @ 28 VDC Per Transmitter
L/S band	5 Watt	1.2 amps	1.0 amps
L/S band	10 Watt	2.0 amps	1.5 amps

6.3 Environmental Specifications

TIMTER transmitters meet the environmental requirements shown in Table 15.

Table 15: TIMTER Environmental Specifications

Environmental Specifications	Description
Operating temperature (10 mW, 1 W, 5 W, 10 W models)	-40°C to +85°C
Operating temperature (20 W models)	-40°C to +70°C
Non-operating temperature (all models)	-40°C to +85°C
Operating humidity	0 to 95% (non-condensing)
Altitude	Up to 100,000 ft.

6.3.1 EMI Performance

Every Quasonix transmitter is designed to operate reliably and unobtrusively in the most challenging environments. This includes electromagnetic interference and compatibility (EMI/EMC) requirements. More specifically, all Quasonix transmitters in the TIMTER™ family (2 cubic inches and above) have been designed to comply with the following requirements of MIL-STD-461G (and MIL-STD-461E and -461F, when those now-obsolete standards have been applied):

Table 16: TIMTER™ EMI Compliance

Requirement	Description
CE101	Conducted Emissions, Audio Frequency Currents, Power Leads
CE102	Conducted Emissions, Radio Frequency Potentials, Power Leads
CE106	Conducted Emissions, Antenna Port
CS101	Conducted Susceptibility, Power Leads
CS114	Conducted Susceptibility, Bulk Cable Injection
CS115	Conducted Susceptibility, Bulk Cable Injection, Impulse Excitation
CS116	Conducted Susceptibility, Damped Sinusoidal Transients, Cables and Power Leads
RE101	Radiated Emissions, Magnetic Field
RE102	Radiated Emissions, Electric Field
RS101	Radiated Susceptibility, Magnetic Field
RS103	Radiated Susceptibility, Electric Field

Quasonix transmitters have been tested for compliance with these standards approximately annually since 2004. However, such testing is only performed as part of a qualification program, and the test results are the exclusive property of the customer who paid for them. If you need EMI testing on a particular part number, please contact sales@quasonix.com for a quote.

6.4 Carrier Frequency Tuning

The carrier frequency is selectable in 0.5 MHz steps. Frequencies supported by TIMTER transmitters are listed in Table 17.

Table 17: Carrier Frequencies (MHz)

Band	Minimum Freq	Maximum Freq	Default Freq
Lower L, Upper L, and S	1435.5 MHz	2394.5 MHz	1450.5 MHz

6.5 Carrier Frequency Error

The frequency error is ± 6 ppm for all causes, including aging over five (5) years.

6.6 Bit Error Rate

The transmitter meets the following BER limits when tested with the Quasonix' multi-mode, multi-symbol trellis demodulator.

Table 18: Transmitter BER Specifications with Quasonix Demodulator

BER	Maximum Eb/N0 (dB)		
	PCM/FM, Tier 0	SOQPSK-TG, Tier I	MULTI-h CPM, Tier II
10-3	7.0	9.0	11.8
10-4	8.5	11.0	13.3
10-5	9.5	12.5	14.3
10-6	10.5	14.0	15.3

6.7 Modulated RF Power Spectrum

The transmitter's modulated spectrum complies with the IRIG-106 PSD mask:

$$M\ (dBc) = Max\ (\{K - 100 \log\angle|f - f_c\angle| + 90 \log (R)\}, \{-(55 + 10 \log (P))\}),\ \angle|f - f_c\angle| \geq R/m \text{ where}$$

M = power relative to unmodulated carrier (i.e., units of dBc) at frequency f (MHz)

f = frequency in MHz

f_c = the carrier frequency in MHz

R = the bit rate in Mb/s

P = the rated power output of the UUT, in Watts

and the values of K and m are as tabulated in Table 19.

Table 19: K and m Values per Waveform

	K	m
PCM/FM, Tier 0	-28	2
SOQPSK TG, Tier I	-61	4
MULTI-h CPM, Tier II	-73	4

As noted in the equation above, the mask has a floor at –(55 + 10 log(P)) dBc, and the mask imposes no limit on the spectrum for frequency offsets less than R/m. Representative examples of the transmitted spectrum, with the appropriate mask, are shown in Figure 19, Figure 20, and Figure 21.

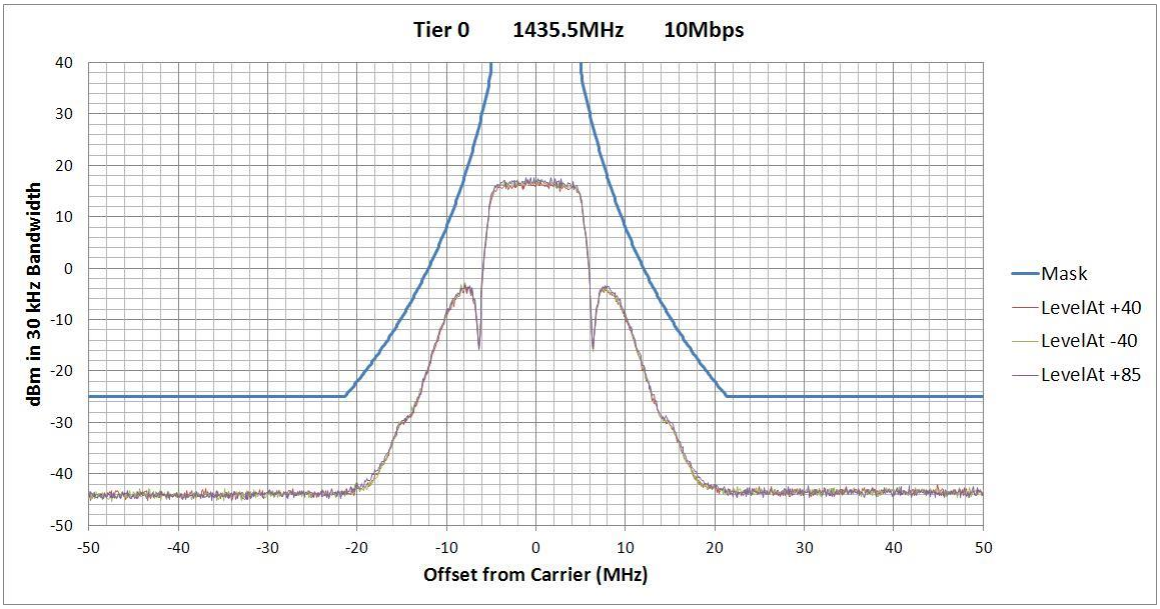

Figure 19: PCM/FM (Tier 0) Power Spectral Density with Mask

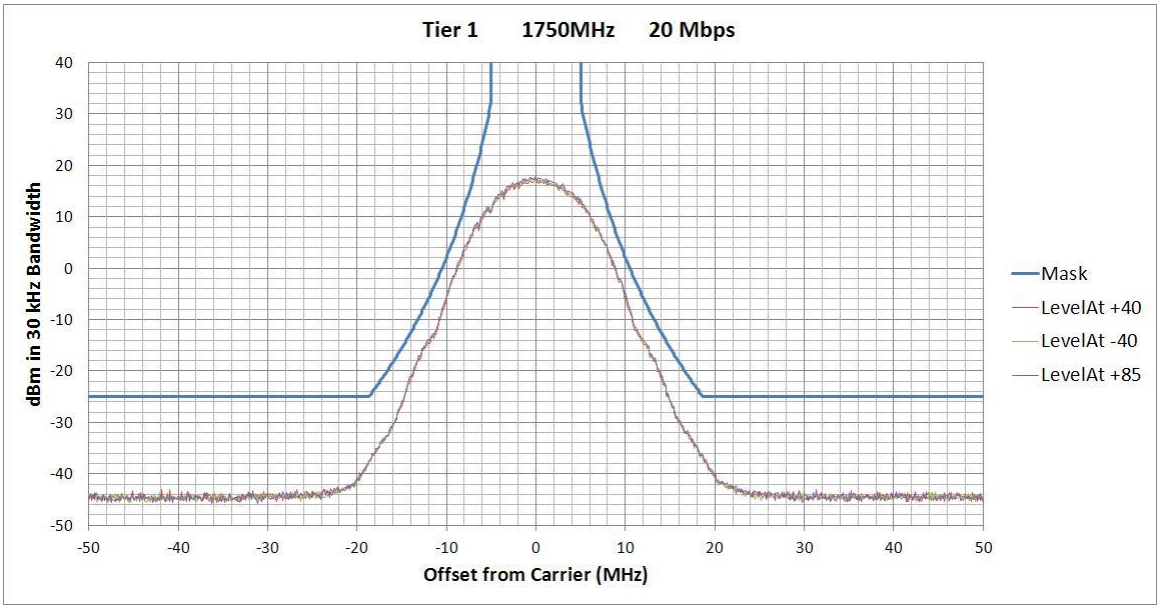

Figure 20: SOQPSK-TG (Tier I) Power Spectral Density with Mask

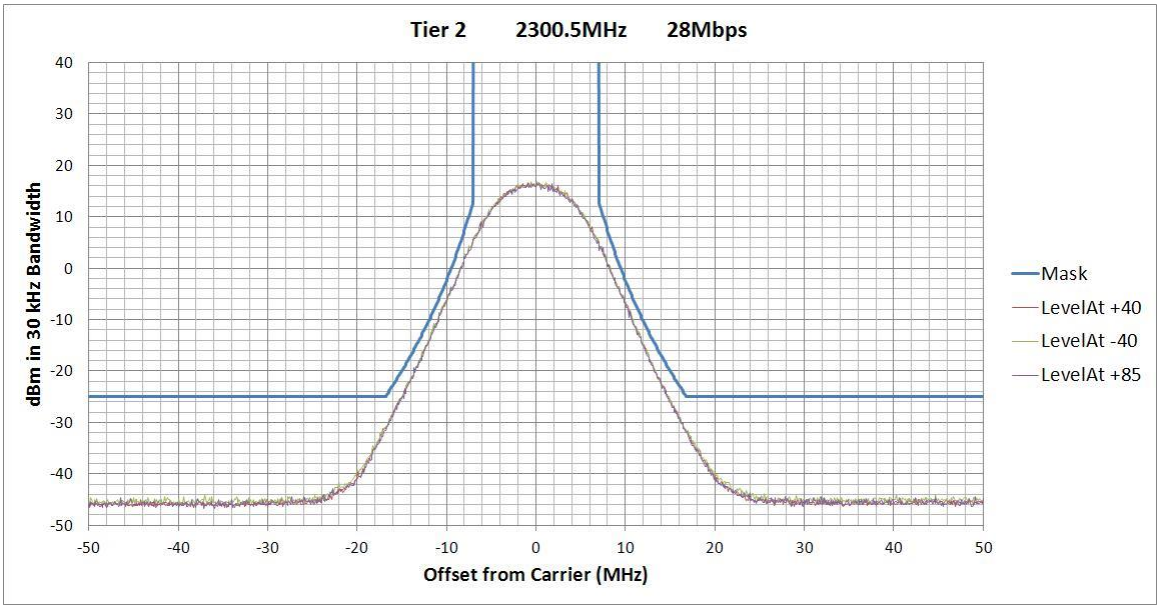

Figure 21: MULTI-h CPM (Tier II) Power Spectral Density with Mask

6.8 Phase Noise Power Spectrum

TIMTER phase noise limits are shown in Figure 22.

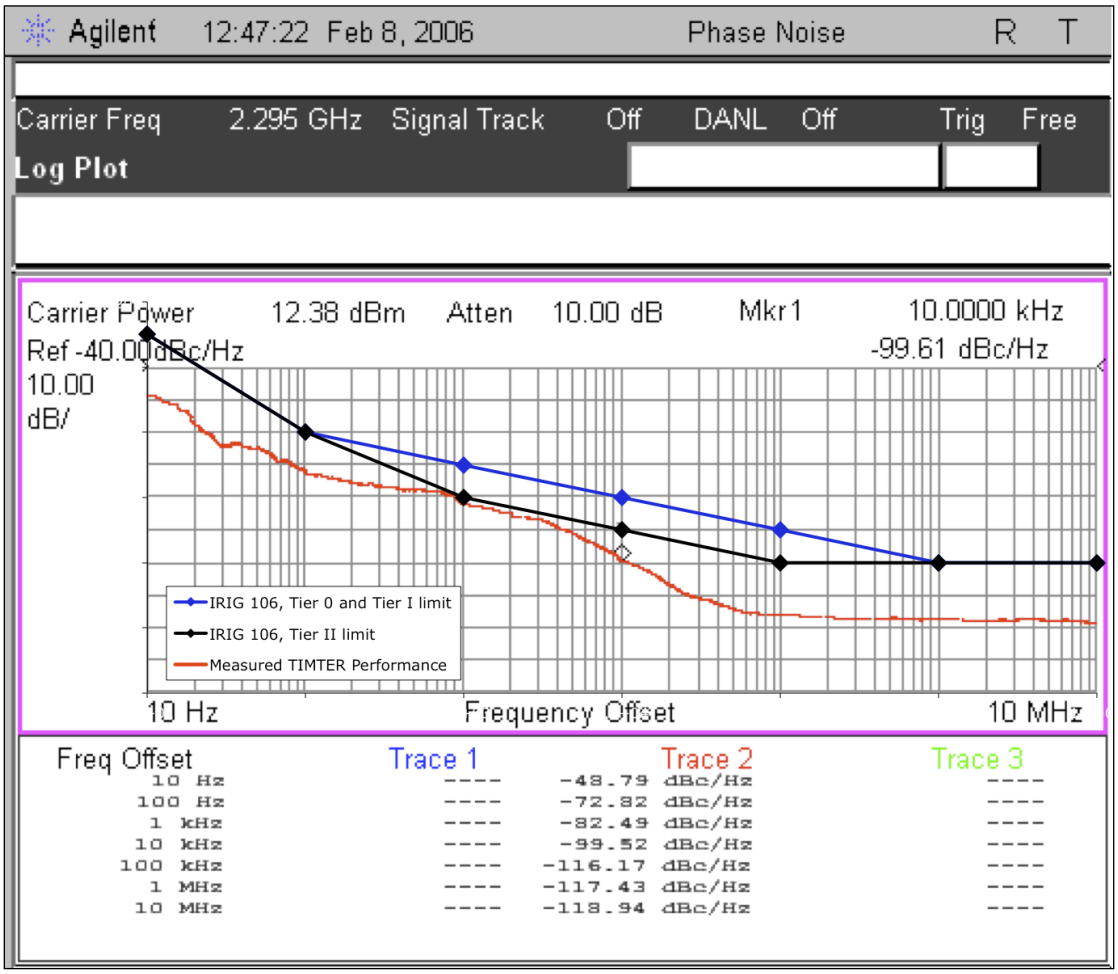

Figure 22: Phase Noise Limit Curve

6.9 Baseplate Temperature

TIMTER is designed for efficient heat transfer between internal heat producing sources and the baseplate. The 10 mW, 20 mW, 5 W, and 10 W TIMTER versions are rated for operation with baseplate temperatures ranging from -40°C to +85 °C, while the 20W version is rated from -40°C to +70 °C.

6.10 Vibration and Shock

The transmitter is designed and tested to operate normally when subjected to random vibration and shock. The shock and vibe test setup employed by Quasonix is shown in the following figures.

Figure 23: Vibration / Shock Testing System

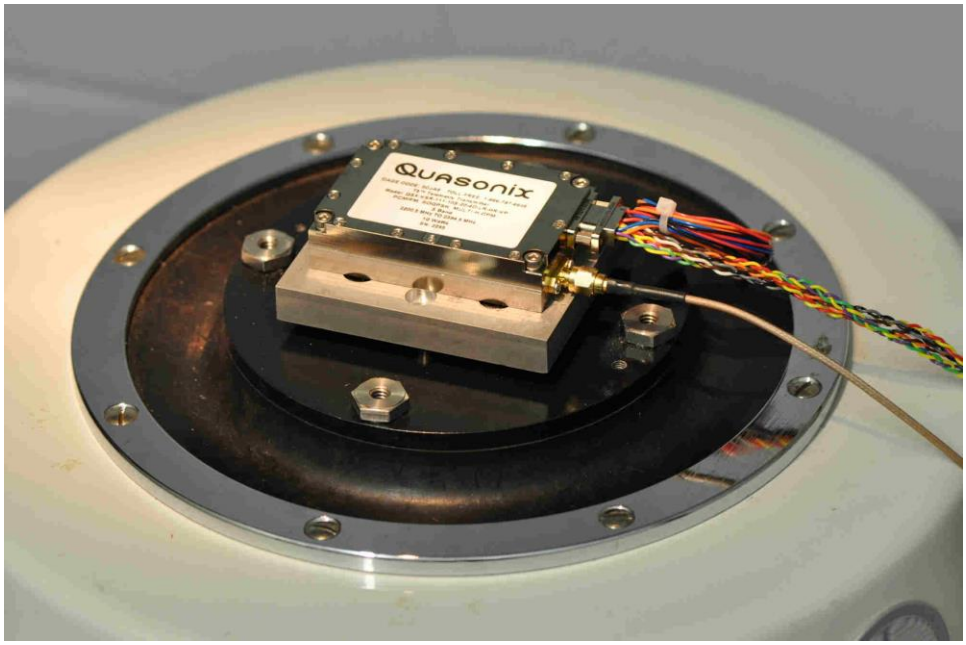

Figure 24: TIMTER Mounted for Z-axis Testing

Figure 25: TIMTER Mounted for X-axis Testing

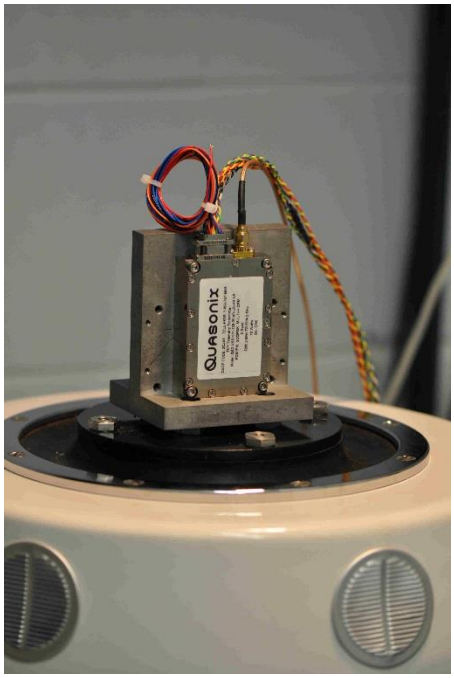

Figure 26: TIMTER Mounted for Y-axis Testing

6.10.1 Vibration Testing

Each transmitter is subjected to the random vibration spectrum depicted in Figure 27 and Table 20 prior to shipment.

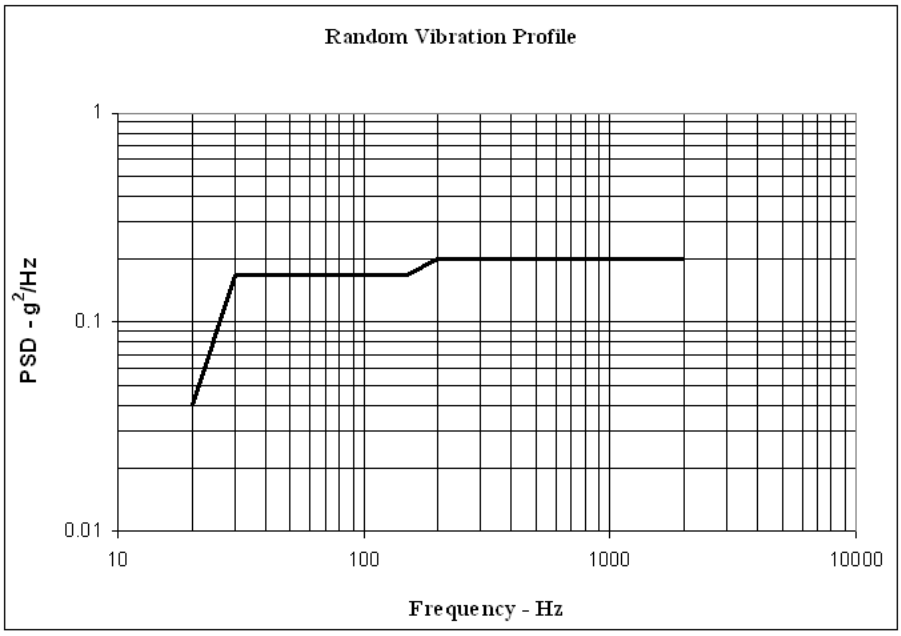

Figure 27: TIMTER Vibration Profile

Table 20: Random Vibration Spectrum

Breakpoints	
Frequency (Hz)	**PSD (g2/Hz)**
20	0.04
30	0.17
150	0.17
200	0.2
2000	0.2
G (RMS) = 19.6	

During flight-qualification testing, the unit under test (UUT) was shaken for 30 minutes in each axis. The results are shown in Figure 28, Figure 29, and Figure 30.

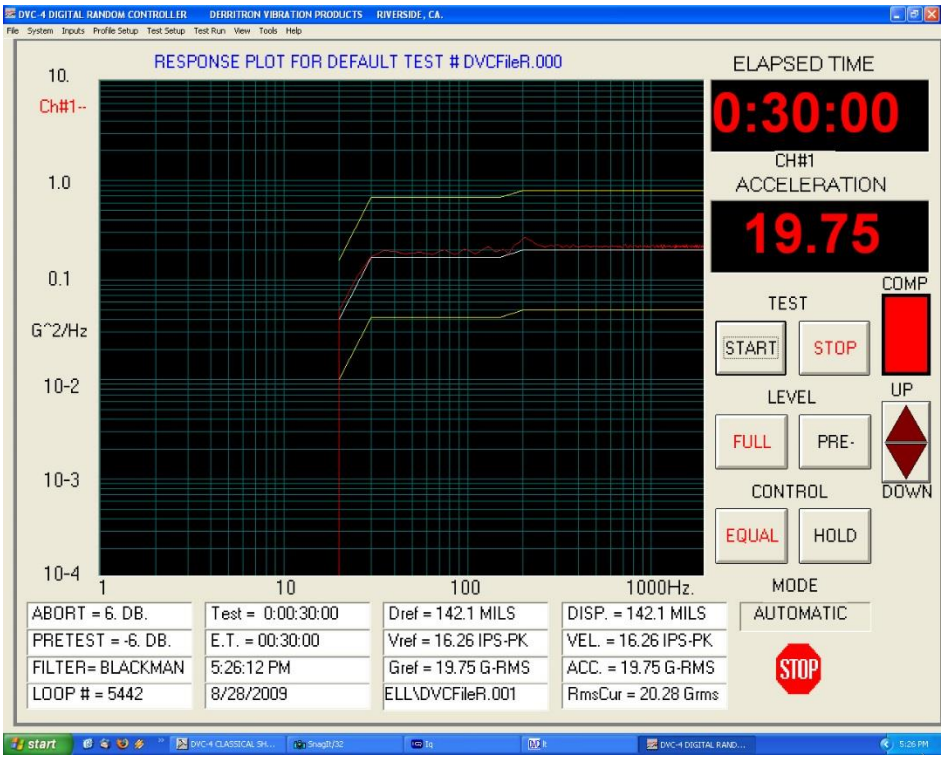

Figure 28: Z-axis Vibration Spectrum

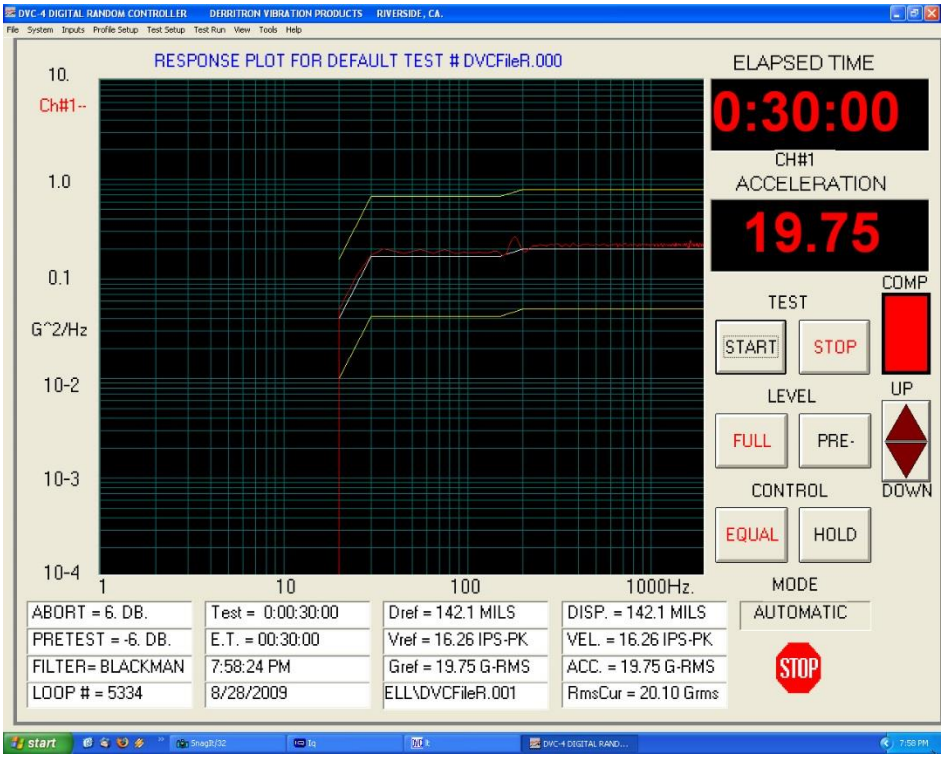

Figure 29: Y-axis Vibration Spectrum

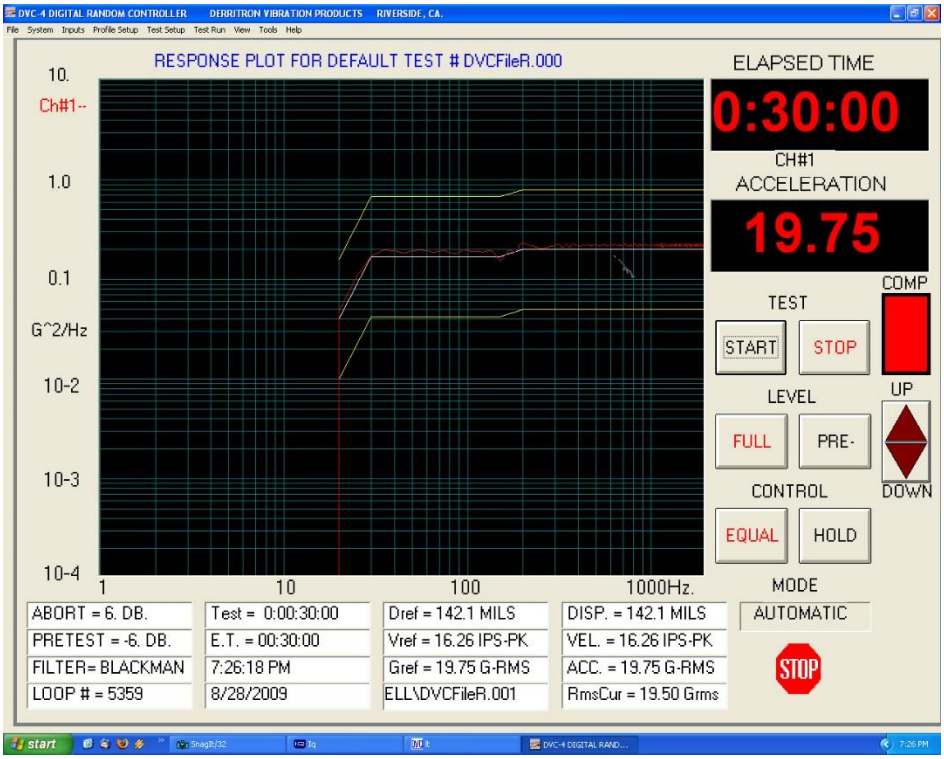

Figure 30: X-axis Vibration Spectrum

6.10.2 Shock Testing

In addition to vibration testing, the UUT was subjected to shock pulses, as follows:

- Type: Half-sine
- Level: 60 g
- Duration: 5 milliseconds

Application: Three (3) shocks in each direction of the three (3) orthogonal axes both positive and negative, for 18 shocks total

The plots of the positive and negative pulses in each of the three axes are shown in the following figures:

Figure 31: Shock Pulse, Z-axis Positive

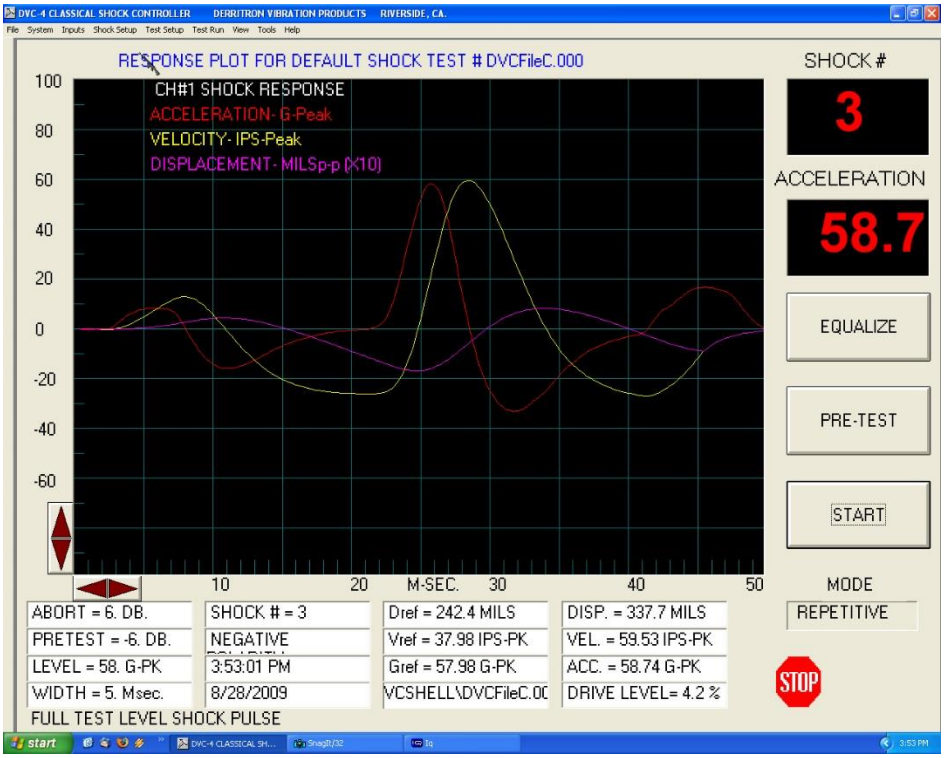

Figure 32: Shock Pulse, Z-axis Negative

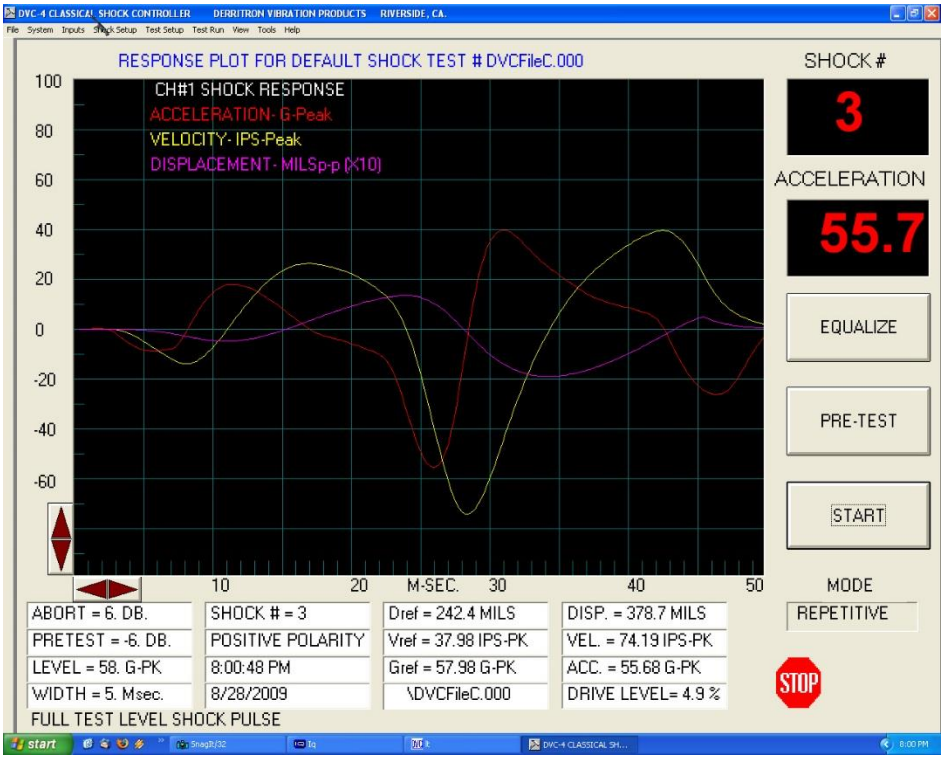

Figure 33: Shock Pulse, Y-axis Positive

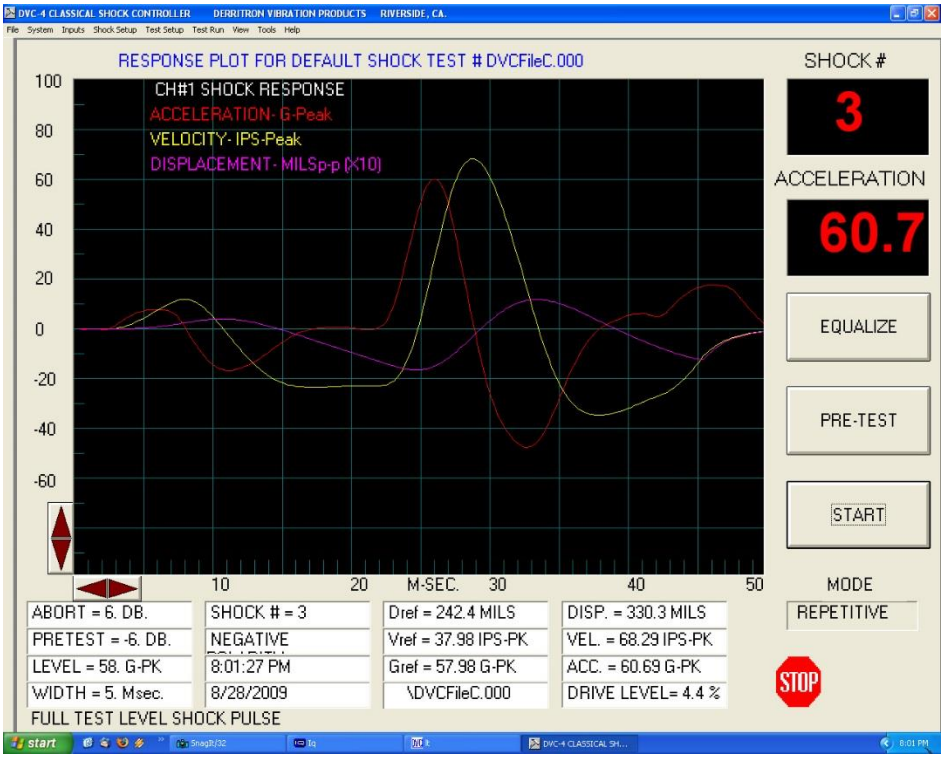

Figure 34: Shock Pulse, Y-axis Negative

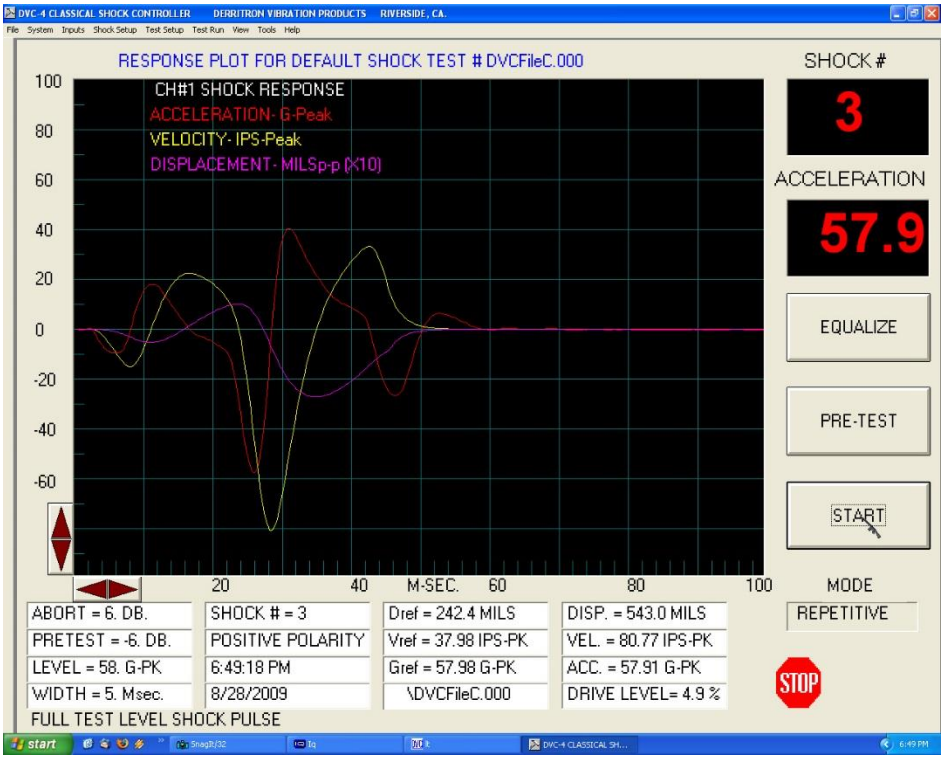

Figure 35: Shock Pulse, X-axis Positive

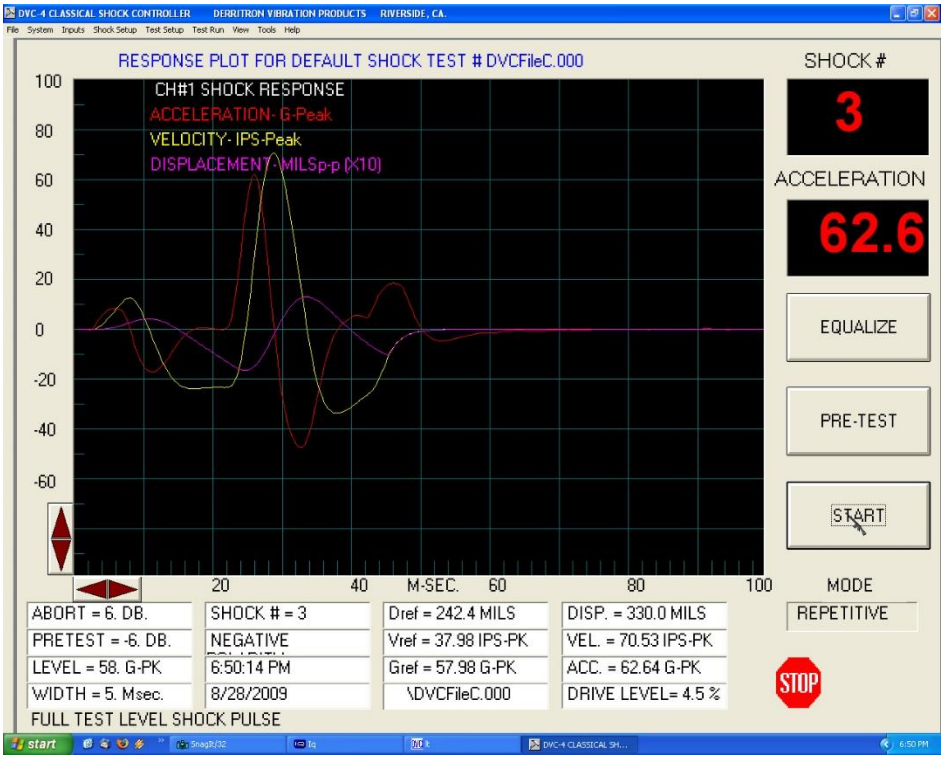

Figure 36: Shock Pulse, X-axis Negative

7 Maintenance Instructions

The TIMTER™ transmitter requires no regular maintenance, and there are no user-serviceable parts inside.

8 Product Warranty

The TIMTER™ transmitter carries a standard parts and labor warranty of one (1) year from the date of delivery.

8.1 Quasonix Limited Warranty Statement

This Limited Warranty Statement (this "Limited Warranty") applies to all hardware and software products and internal components of such products (the "Products") sold by Quasonix, or its representatives, authorized resellers, or country distributors (collectively referred to herein as "Quasonix"). EXCEPT AS EXPRESSLY SET FORTH IN THIS LIMITED WARRANTY, QUASONIX MAKES NO OTHER WARRANTIES, EXPRESSED OR IMPLIED, INCLUDING ANY IMPLIED WARRANTIES OF MERCHANTABILITY OR FITNESS FOR A PARTICULAR PURPOSE WITH RESPECT TO ANY PRODUCTS SOLD BY IT. Quasonix expressly disclaims all warranties and conditions not stated in this limited warranty. There are no warranties which extend beyond the description on the face hereof. Capitalized terms not otherwise defined herein shall have the meaning set forth in those certain General Terms and Conditions of Sale for Standard Product, as amended from time to time.

Quasonix warrants to customer that for one (1) year from the date of shipment of the Products by Quasonix (the "Warranty Period"), such Products purchased from Quasonix or its authorized affiliate will materially conform to the specifications set forth in the applicable Quasonix Specifications, if any, and are free from defects in materials and workmanship under normal use during the Warranty Period. As used herein, "normal use" means the intended use of the Products for which it was designed by Quasonix.

This Limited Warranty extends only to the original purchaser of the Products and is not transferable to anyone who obtains ownership of the Products from the original purchaser.

Quasonix's software, whether incorporated into the Products or sold separately, is warranted solely to the extent that problems or "bugs" are found in the software and affect the functional operation of the Products. At no time shall requests for changes in the software architecture or visual esthetics be considered a warranty item.

The Products are manufactured using new materials only. Replacement parts may be new or equivalent to new. Replacement parts are warranted to be free from defects in material or workmanship for thirty (30) days or for the remainder of the Warranty Period of the Products in which they are installed, whichever is longer.

During the Warranty Period, Quasonix will repair or replace the defective Products. All components or hardware products removed from the Products under this Limited Warranty become the property of Quasonix. All warranties are limited to the repair or replacement of the Products.

In no event shall Quasonix be liable for any special, consequential, incidental or indirect damages of any kind, including, without limitation, loss of profits, loss of data, "down-time," loss of use or damage to other equipment, or personal injury or death, whether or not Quasonix has been advised of the possibility of such loss.

Notwithstanding anything to the contrary herein, Quasonix's entire liability hereunder from any cause whatsoever and regardless of the form of action shall be limited to the amount actually received by Quasonix.

Quasonix shall not be liable for a breach of the warranty set forth in this Limited Warranty unless: (i) the customer gives written notice of the defect, reasonably described, to Quasonix's Contracts Administrator within thirty (30) days of the time when customer discovers or ought to have discovered the defect and obtains a Return Materials Authorizations ("RMA") number; (ii) Quasonix is given a reasonable opportunity after receiving the notice to examine such Products and customer (if requested to do so by Quasonix) returns such Products to Quasonix's facility in Moorpark, CA, unless otherwise approved by Quasonix; and (iii) Quasonix reasonably verifies customer's claim that the Products are defective.

Subject to the foregoing, with respect to any such Products during the Warranty Period, Quasonix shall, in its sole discretion, either: (i) repair or replace such Products (or the defective part) or (ii) credit or refund the price of such

Products at the pro rata contract rate provided that, if Quasonix so requests, customer shall, at Quasonix's expense, return such Products to Quasonix.

The customer is responsible for all costs associated with packaging and shipping of the defective Products to Quasonix's facility and clearly marking or affixing the given RMA number on the shipping label. Quasonix is not responsible for any loss or damage during shipment to Quasonix's facility. Following repair or replacement of covered Products, Quasonix will assume responsibility for the costs associated with the return of the material to the customer to an address provided by the customer. Notwithstanding the foregoing, items returned to Quasonix's facility and found to be operational or otherwise not covered by this Limited Warranty shall be returned to the customer at the customer's expense.

This Limited Warranty does not apply to expendable parts, such as cables, lamps, fuses, connectors, etc. This Limited Warranty does not extend to any Products which have been damaged or rendered defective (a) as a result of accident, misuse, abuse, or external causes; (b) by operation outside the usage parameters stated in the user documentation that shipped with the Products; (c) as a result of a failure to follow the instructions in the Operations & Maintenance Manual (d) by the use of parts not manufactured or sold by Quasonix; or (e) by modification or service by anyone other than (i) Quasonix, (ii) an Quasonix authorized service provider, or (iii) your own installation of end-user replaceable Quasonix or Quasonix approved parts if available for the Products in the servicing country.

THE TERMS OF THE WARRANTIES CONTAINED HEREIN DO NOT IN ANY WAY EXTEND TO ANY PRODUCT OR PART THEREOF OR SOFTWARE MATERIALS WHICH WERE NOT MANUFACTURED BY SELLER OR PREPARED BY SELLER OR ANY OF ITS AFFILIATES.

These terms and conditions constitute the complete and exclusive warranty agreement between the customer and Quasonix regarding the Products purchased. This Limited Warranty is applicable in all countries and may be enforced in any country where Quasonix or its authorized affiliates offer warranty service subject to the terms and conditions set forth in this Limited Warranty.

These terms and conditions supersede any prior agreements or representations (including representations made in Quasonix sales literature or advice given to the customer by Quasonix or an agent or employee of Quasonix) that may have been made in connection with the purchase of the Products. No change to the conditions of this Limited Warranty is valid unless it is made in writing and signed by an authorized representative of Quasonix.

8.1.1 Extended Warranties

Extended warranties or extra coverage are available upon request. Please contact Quasonix for details and pricing.

THE REMEDIES SET FORTH IN THIS LIMITED WARRANTY STATEMENT SHALL BE THE BUYER'S SOLE AND EXCLUSIVE REMEDY AND SELLER'S ENTIRE LIABILITY FOR ANY BREACH OF THE LIMITED WARRANTY SET FORTH HEREIN.

052217mbb002

9 Technical Support and RMA Requests

In the event of a product issue, customers should contact Quasonix via phone (1-513-942-1287) or e-mail (support@quasonix.com) to seek technical support. If the Quasonix representative determines that the product issue must be addressed at Quasonix, a returned materials authorization (RMA) number will be provided for return shipment.

Authorized return shipments must be addressed in the following manner:

Quasonix, Inc.
ATTN: Repair, RMA #
6025 Schumacher Park Drive
West Chester, OH 45069

To ensure that your shipment is processed most efficiently, please include the following information with your product return:

- Ship To – Company name, address, zip code, and internal mail-drop, if applicable
- Attention/Contact person – Name, Title, Department, Phone number, email address
- Purchase Order Number – If applicable
- RMA Number – provided by the Quasonix representative

Please note that Quasonix reserves the right to refuse shipments that arrive without RMA numbers.

10 Appendix A – Bench Set Up for STC and LDPC

Note: This appendix only refers to the 8.400 in^3 Legacy Dual Transmitter pictured in Figure 37. For information about bench set up for a 7.200 in^3 Dual Transmitter, refer to the Multi-mode Dual Transmitter user manual.

Configuring STC and LDPC in a lab or bench set up requires emulating a field set up, some aspects of which may not be intuitively obvious. This appendix covers set up and command usage for the Legacy Dual Transmitter as well as its connection to Compact or Rack Mount RDMS Receivers.

Figure 37: Quasonix Legacy Dual Transmitter

Before setting up the transmitter, it is important to understand the differences in receiver configuration required. A field set up using a Dual Transmitter and Rack Mount Receiver in STC mode is pretty straight forward: A transmit antenna connects to each RF output on the transmitter and a receive antenna connects to each RF input on the receiver. The rest of the connection occurs through the air. This is not the case in a bench configuration.

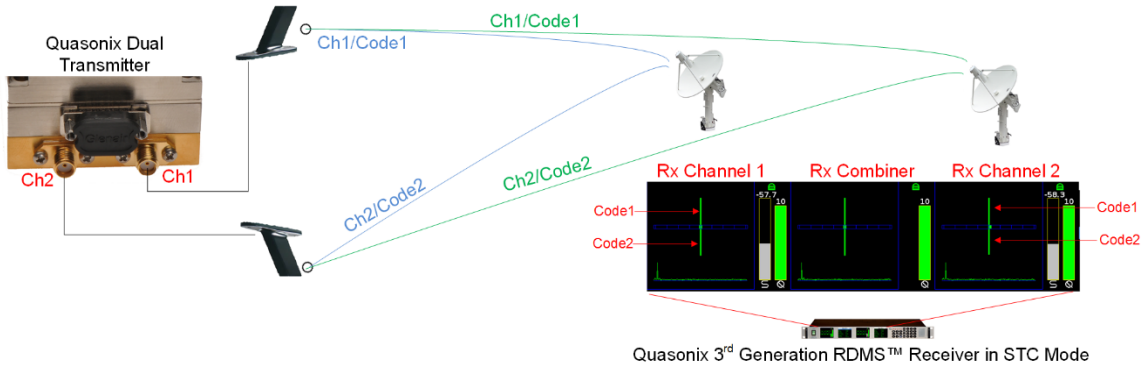

Figure 38: Example STC Field Configuration for Dual Transmitter and Rack Mount Receiver

10.1 Receiver Connections

Two types of receiver may be configured, the Compact Receiver, which must be accessed via a Handheld Programmer or a PC running the Terminal application, or the Rack Mount Receiver, which may be accessed via the front panel or the browser based graphical user interface (GUI).

10.1.1 Compact Receiver

The Compact receiver normally requires only a single direct connection of the RF input from a transmitter, as shown in Figure 39.

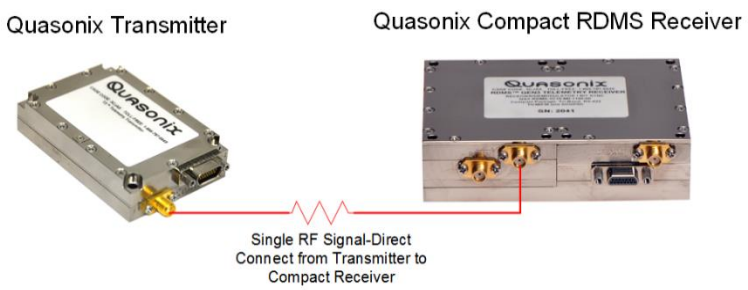

Figure 39: Example Bench RF Configuration for Single Transmitter and Compact Receiver

For STC, the Compact receiver still requires only a single RF input but it must be the combined RF outputs from Channel 1 and Channel 2 of the dual transmitter, as shown in Figure 40.

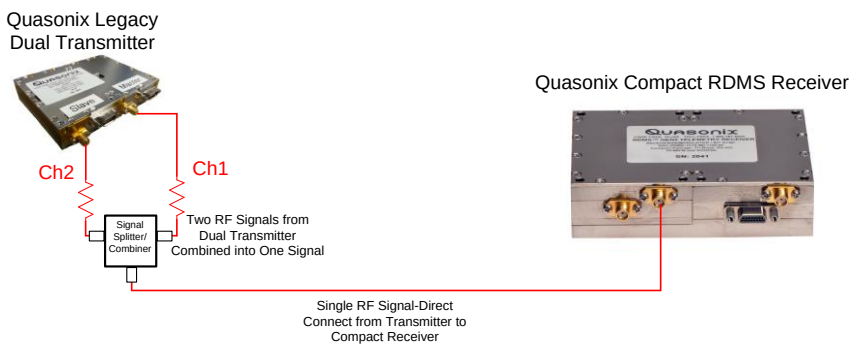

Figure 40: Example Bench RF Configuration for Dual Transmitter and Compact Receiver

10.1.2 Rack Mount Receiver

A Rack Mount receiver normally requires a splitter to accept the RF input from a transmitter to separate it into Channel 1 and Channel 2 inputs at the receiver, as shown in Figure 41 and Figure 42.

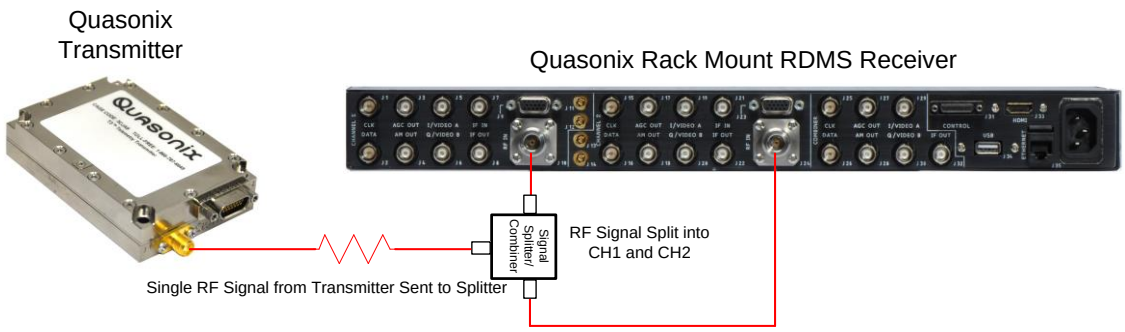

Figure 41: Example Bench RF Configuration for Single Transmitter and Rack Mount Receiver

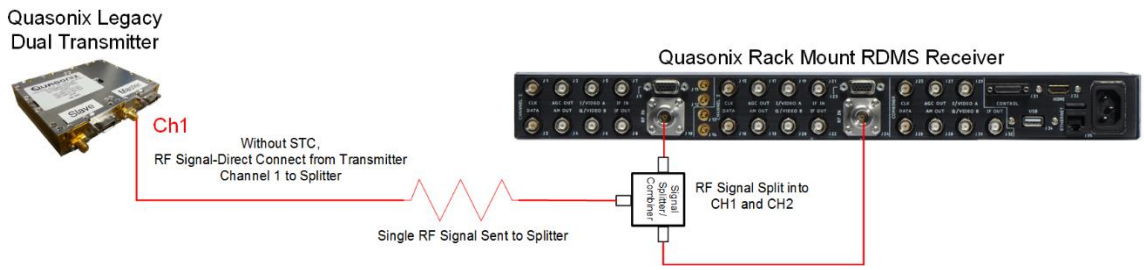

Figure 42: Example Bench RF Configuration for Dual Transmitter and Rack Mount Receiver—Without STC

For STC, the Rack Mount receiver still requires a splitter to accept the RF input, but the input to the splitter must be combined RF outputs from Channel 1 and Channel 2 of a dual transmitter, as shown in Figure 43.

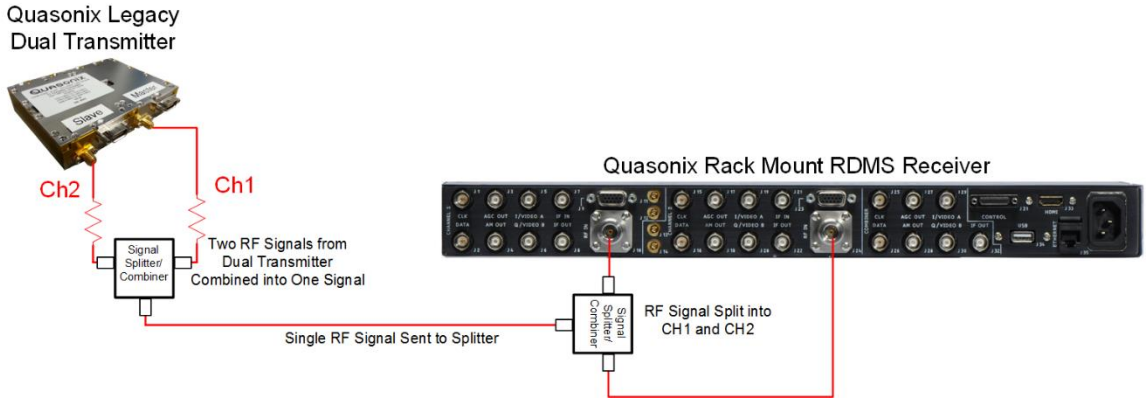

Figure 43: Example Bench RF Configuration for Dual Transmitter and Rack Mount Receiver—With STC

10.2 Transmitter Commands

The Legacy Dual transmitter, shown in Figure 44, enables several configurations including SOQPSK only, SOQPSK with LDPC, SOQPSK with STC, and SOQPSK with LDPC and STC. In addition to establishing the correct connection(s) to a receiver, proper configuration requires setting up the transmitter with a small number of commands.

Figure 44: Quasonix Legacy Dual Transmitter

10.2.1 SOQPSK Only

Table 21: Input Commands for SOQPSK Only

Master	Slave	Note
MO 1	MO 1	
SO 0	SO 0	Requires clock/data input to both the master and slave
SE 0	SE 0	
LD 0	LD 0	
DE 1	DE 1	

10.2.2 SOQPSK + LDPC

Table 22: Input Commands for SOQPSK with LDPC

Master	Slave	Note
MO 1	MO 1	
SO 0	SO 0	Requires clock/data input to both the master and slave
SE 0	SE 0	
LD 1	LD 1	
DE 0	DE 0	The LDPC decoder in the receiver can resolve phase ambiguity using the LDPC attached sync marker, so differential encoding is not needed

10.2.3 SOQPSK + STC

Table 23: Input Commands for SOQPSK with STC

Master	Slave	Note
MO 1	MO 1	
SO 1	SO 0	Requires clock/data input to master only
SE 1	SE 1	
LD 0	LD 0	
DE 0	DE 0	The STC demodulator in the receiver can resolve phase ambiguity using the STC pilot, so differential encoding is not needed

10.2.4 SOQPSK + STC + LDPC

Table 24: Input Commands for SOQPSK with STC and LDPC

Master	Slave	Note
MO 1	MO 1	
SO 1	SO 0	Requires clock/data input to master only
SE 1	SE 1	
LD 1	LD 1	
DE 0	DE 0	The STC demodulator and LDPC decoder in the receiver can resolve phase ambiguity using the STC pilot and LDPC attached sync marker, so differential encoding is not needed

11 Appendix B – Acronym List

Acronym	Description
A	Amperes (amps)
AC	Automatic Carrier Wave option
AM	Amplitude Modulation
AQPSK	Variant of Quadrature Phase Shift Keying
ARTM	Advanced Range Telemetry
AUQPSK	Variant of Quadrature Phase Shift Keying
BER	Bit Error Rate
BNC	Bayonet Neill-Concelman Connector (RF Connector)
BPSK	Binary Phase Shift Keying
CF	Clock Free option
CPM	Continuous Phase Modulation
DB	Data Bias Level option
DB-9	D-subminiature 9 pin Serial Connector
DDS	Direct Digital Synthesizer
DP	Dual Power
DS	Data Source option
FPGA	Field Programmable Gate Array
FS	Frequency Step
HR	High Bit Rate
ID	Internal Data
kbps	Kilobits per second
KHz	Kilohertz
LR	Low Bit Rate
LS	Lower S-band
mbps	Megabits per second
MHCPM	multi-h Continuous Phase Modulation
MHz	Megahertz

Acronym	Description
MO	Modulation
mwatt	Megawatt
N	(connector type) Threaded RF connector
OQPSK	Offset Quadrature Phase Shift Keying
PCMFM	Pulse Code Modulation/Frequency Modulation
PL	Power Level
PSK	Phase Shift Keying
PW	Parameter Write option
QPSK	Quadrature Phase Shift Keying
QT	Query Temperature option
RF	Radio Frequency
RG	Reverse Gender option
RS-232	Recommended Standard 232 (Serial Communications)
SC	Startup Configuration option
SN	Serial Number
SOQPSK	Shaped Offset Quadrature Phase Shift Keying
SOQPSK-TG	Shaped Offset Quadrature Phase Shift Keying –Telemetry Group
TIMTER	Tier I Missile Test Transmitter
TTL	Transistor Transistor Logic
UQPSK	Unbalanced Quadrature Phase Shift Keying
US	Upper S-band
USB	Universal Serial Bus
VAC	Voltage Alternating Current
VDC	Voltage Direct Current
VP	Variable Power option
VR	Variable Reference Level
VSWR	Voltage Standing Wave Ratio
W	Watt
WV	Wide Input Voltage Range option