Quasonix

Multi-Mode Dual Telemetry Transmitters

MADE IN USA

Ultimate Bitstream Accuracy Starts Here

Quasonix digital multi-mode dual telemetry transmitters provide the flexibility of two high-performance, independent transmitters in one package. Quasonix is... Reinventing Telemetry™.

Industry Leader in Transmitter Technology — Proven quality and performance with over 16,000 transmitters shipped; TIMTER™ dual transmitters combine compact designs with outstanding size-to power-ratios.

Compact Design — As small as 2.0" x 3.0" x 1.2", the dual transmitter can serve as a drop-in replacement for other common transmitters.

Two Independent RF Outputs — Dual RF outputs at 10 watts each with a single Micro-D input can be configured with a single or dual data input.

Improves EIRP (Effective Isotropic Radiated Power) — Direct connection to dual antenna platforms via dual outputs eliminates losses due to RF power splitters or couplers and yields robust, streamlined installation.

Troubleshooting Simplified — Independent outputs allow direct verification of each signal path without changing the hardware configuration - impossible with split systems.

Direct Support for Frequency Diversity — Supports F1/F2 operation that can significantly reduce self interference between antennas and allows frequency diversity combining at the ground receiver for improved performance.

Space-Time Coding Capable — With negligible bandwidth expansion, Space-Time Coding eliminates link outages caused by the "two antenna problem". Adopted by the Range Commander's Council, IRIG 106-17, Appendix 2-E.

Low Density Pavrity Check (LDPC) Option Available — Add forward error correction mode and improve link margin, nearly tripling the operating distance of your telemetry link. Adopted by the Range Commander's Council, IRIG 106-17, Appendix 2-D; extended LCPC encoding provides all six implemented codes.

Quasonix Digital Switch Box (QSX-AC-DSWBX) Available — Adds the ability to change frequency, mode, LDPC, and STC without access to the serial communications port.

Airborne IntelliCool™ Heat Sink Available — Add the cooling power you need: 2"x3" heat sink (QSX-AC-32-HS-28V-SP) or 4"x3" heat sink (QSX-AC-34-HS-28V-SP).

NEW! Firmware can now be updated via the serial communications port!

© Copyright 2023 Quasonix, Inc.

Dual TIMTER Transmitter Specifications

Performance

Modulation type	PCM/FM (ARTM Tier 0), SOQPSK-TG (ARTM Tier 1), Multi-h CPM (ARTM Tier II), BPSK, QPSK, OOPSK, UQPSK, STC

Carrier frequency tuning range

All frequency bands may be tuned 0.5 MHz above or below the stated frequency.

(For specific frequency bands, contact Quasonix.)

*Custom frequency ranges are available. Contact Quasonix for details.

Band ID Code	Lower L band 1435.5-1534.5 MHz	Upper L band 1750.0-1855.0 MHz	Lower S band 2200.5-2300.5 MHz	Upper S band 2300.5-2394.5 MHz	C band 4400.0-4950.0 MHz	Mid C band 5091.0-5150.0 MHz	Euro Mid C band 5150.0 - 5250.0 MHz	Max Power per Channel
A			✓					10 W
B						✓	✓	10 W
C					✓			10 W
D					✓	✓		10 W
E	✓	✓	✓	✓	✓	✓	✓	10 W
F			✓	✓	✓			10 W
G							✓	10 W
H	✓				✓			10 W
J					✓	✓	✓	10 W
K			✓	✓	✓	✓	✓	10 W
L	✓							10 W
M	✓	✓	✓	✓				10 W
N				✓				10 W
Q	✓	✓	✓	✓	✓	✓		10 W
S			✓	✓				10 W
T	✓				✓	✓		10 W
V			✓	✓	✓	✓		10 W
W			✓	✓		✓	✓	10 W
X						✓		10 W
Y	✓	✓			✓	✓		10 W
Z	✓					✓	✓	10 W

RF output power

L, S, or C band: 10 W per Output
L/C or S/C band: 10 W per Output
L/S band or L/S/C band: 10 W per Output

*For higher max power requirements, call Quasonix.

Option DP: 64 power settings approx. 0.5 dB apart, select between any two via basebnd connector pin
Option VP: 64 power settings approx. 0.5 dB apart, selecting any level via serial command

Performance (Continued)

Data (bit) rate, automatic rate adaptation	Standard Dual: Option HR: Option LR:	0.1-28 Mbps (0.05-14 Mbps for PCM/FM) Extends upper limit to max of 46 Mbps/SOQPSK, ARTM CPM (23 Mbps for PCM/FM) Extends lower limit to min of 50 kbps/SOQPSK, ARTM CPM (25 kbps for PCM/FM)	
Clock Free Data (bit) rate	Standard Dual: With BR x command: With BR A command:	0.1-35 Mbps Allows user to enter a fixed bit rate Automatically detects bit rate	
Input current @ +28 VDC (both channels transmitting)	L or S band, 10 Watt	3.5 A max.	3.2 A typical
	L/S band, 10 Watt (4x3)	3.5 A max.	3.2 A typical
	C band, 10 Watt	3.8 A max.	3.5 A typical
	L/C band or S/C band, 10 Watt (4x3)	5.0 A max.	4.5 A typical
	L/S/C band, 10 Watt (4x3)	5.0 A max.	4.5 A typical
Input voltage	Standard:+28 ± 4 VDC		
Power reversal	Reverse voltage protection		
Serial Control interface	2 - RS-232 serial control interface 4 - RS-422 serial control interface 6 - RS-422; 120 ohms differential, even when unit is powered off		
Clock and Data signal interfaces (Serial data with separate synchronous clock) (Input impedances are only specified when unit is powered On, unless explicitly stated as being valid in the Off state.)	H: TTL (10K ohms to ground) T: TTL (75 ohms to ground) A: TTL selectable between 75 ohms to GND and 10k ohms to GND R: TIA/EIA-422 (RS-422) - 120 ohms differential B: TIA/EIA-422 (RS-422) - 120 ohms differential, even when unit powered off M: Dual mode selectable (TTL terminated 10k ohms to GND, RS-422 term 120 ohms diff.) D: Dual mode selectable (TTL terminated 75 ohms to GND, RS-422 term 120 ohms diff.) S: Tri-mode selectable (TTL term 75 ohms to GND, TTL term 10k ohms to GND, and RS-422 term 120 ohms differential) L: LVDS (Low Voltage Differential Signal)		
Carrier frequency tuning increment	0.5 MHz minimum resolution unless FO option is installed, then 1 Hz minimum		
Carrier frequency accuracy	± 2.0 ppm over temperature ± 6.0 ppm, all causes, including aging over 5 years		
Randomizer	15-stage LFSR, per IRIG 106. Selectable for bypass or enable CCSDS randomizer available if extended LDPC (LD6 option) is installed and enabled		

Environmental

Operating temperature	RF Output	Min. Temp.	Max. Temp.
	10 Watts per Output	-40°C	+70°C
Storage temperature	-55°C to +100°C (all models)		
Operating humidity	0 to 95% (non-condensing)		
Altitude	Up to 100,000 ft.		

© Copyright 2023 Quasonix, Inc.

Physical						
Dimensions	Band	Dual Tx Package	Volume	Width	Length	Height
	L or S	07AH	7.20 in^3	2.00”	3.00”	1.20”
	C	09AK	9.45 in^3	2.00”	3.00”	1.58”
	L/S	18AG	18.42 in^3	4.00”	3.00”	1.54”
	L/C, S/C, L/S/C	24AG, 24AJ, 24AL	22.20 in^3	4.00”	3.00”	2.00”
Vibration	19.6 G (RMS) random, 20 Hz to 2,000 Hz, 3 axes					
Shock	60 G (PK), 1/2 sine, 5 ms duration, 3 axes					
Acceleration	100 G, 3 axes					
Connector - RF	All Transmitters: SMA female					
Connector – Baseband / Primary	Female MDM-15 for RS-422 Clock and Data; Male MDM-15 for TTL Clock and Data					

Dual Transmitter Part Numbering Example

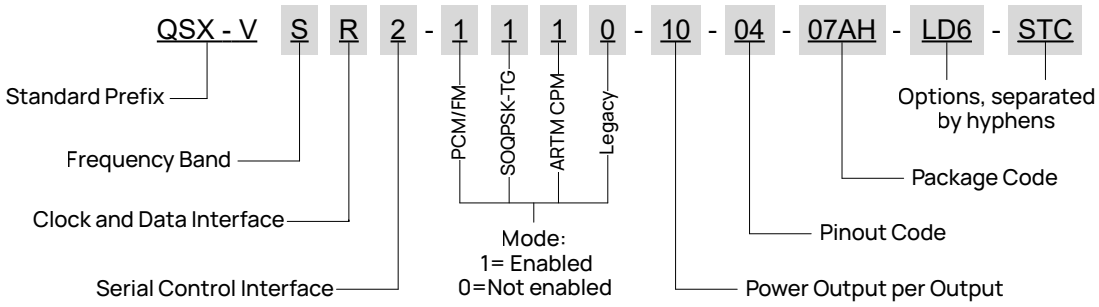

Popular Options

CF - Clock-free Baseband Interface — Clock-free is an optional mode that transmits user data, but uses an internal bit sync to take the place of the normal external clock.

LD6 - Low Density Parity Check — Extended LDPC encoding provides all six implemented LDPC codes—all combinations of two different information block sizes (k=4096 bits and k=1024 bits) and three different code rates (r=1/2, r=2/3, and r=4/5)

STC - Space-Time Coding — STC is a waveform coding technique that uses transmit diversity to avoid destructive interference in two-antenna systems.

VP - Variable Power — Optional variable power operation allows each output to be set to 64 discrete power levels, approximately 0.5 dB apart. Achieve any power split that you need!

6025 Schumacher Park Drive West Chester, OH 45069 | 1-513-942-1287 | www.quasonix.com